Attachment F

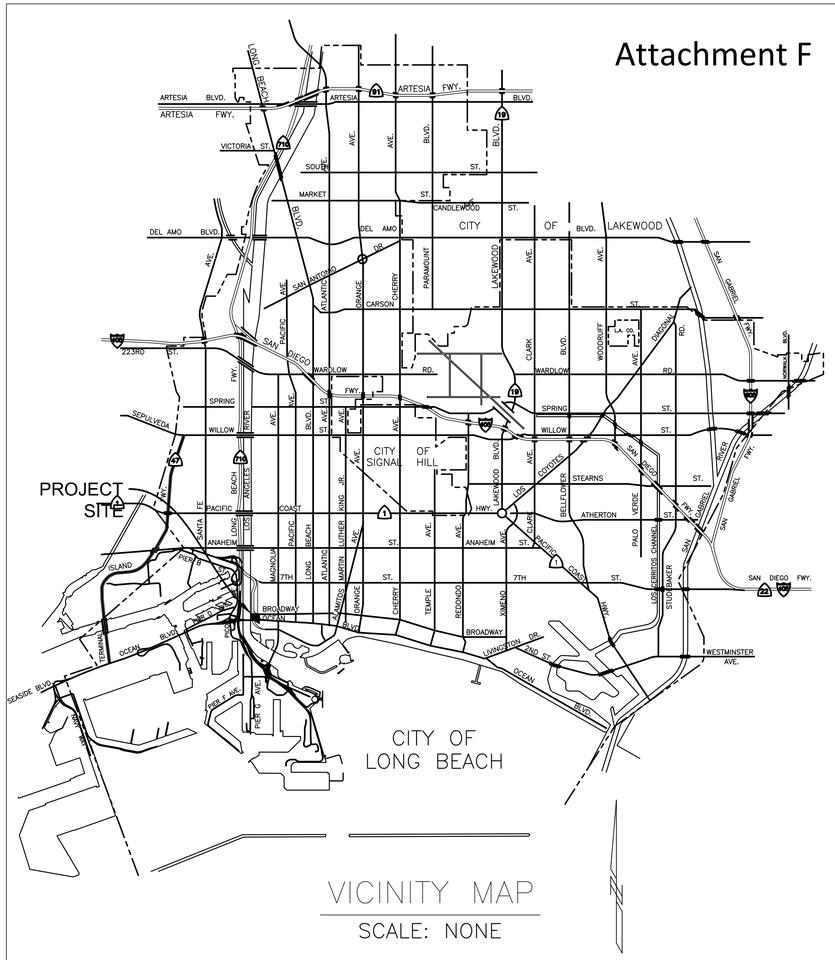

VICINITY MAP

SCALE: NONE

BASIS OF BEARINGS

THE BEARINGS SHOWN HEREON ARE BASED ON THE GRID BEARING NORTH 47°43'39" EAST BETWEEN CGPS CONTROL STATIONS "VTIS" AND "LBC1" AS PER RECORDS ON FILE WITH CALTRANS.

DATUM STATEMENT

COORDINATES ARE BASED ON THE CALIFORNIA COORDINATE SYSTEM (CCS83) ZONE V, NAD 83 (1991.35 EPOCH ADJUSTMENT) SR 02-263, AS PER RECORDS ON FILE WITH CALTRANS.

BENCHMARK

CALTRANS (SR 02-263) "1197A"
NAVD 88
ELEV = 15.466

IN THE CITY OF LONG BEACH, ON GOLDEN SHORE, S/O OCEAN BL. FD. 2 ½" BRASS CAP STAMPED "CLB BM 1197A" IN N'LY PORTION ON CONC. ISLAND FOR METERED PARKING LOT AT S/W QUADRANT OF THE INTERSECTION OF GOLDEN SHORE AND ENTRANCE TO GOLDEN SHORE RV RESORT 1.5' WEST OF WEST CURB; 0.5' N/O BC.

LEGAL DESCRIPTION

THOSE PORTIONS OF LAND IN THE CITY OF LONG BEACH, COUNTY OF LOS ANGELES, STATE OF CALIFORNIA, AS DESCRIBED IN INSTRUMENT NUMBER xxxxxxxxxxxx OFFICIAL RECORDS OF SAID COUNTY.

LONG BEACH PARKS, RECREATION, & MARINE
APPROVAL OF IMPROVEMENT PLANS

APPROVED BY DATE

EARTHWORK QUANTITIES

RAW EARTHWORK SUMMARY	CUT	FILL
RAW VOLUME	10,180 CY	185 CY
NET	9,995 CY EXPORT	
LINER RAW OVEREXCAVATION & RECOMPACTION	3,330 CY	

SHEET INDEX

STANDARD GENERAL CONSTRUCTION NOTES:

1. THE CONTRACTOR/DEVELOPER SHALL NOTIFY THE DEPARTMENT OF PARKS, RECREATION AND MARINE 72 HOURS PRIOR TO THE START OF CONSTRUCTION OF THE IMPROVEMENTS SHOWN ON THE APPROVED PLANS.
2. PLANS, AT EACH STAGE OF PLAN CHECK, SHALL BE ROUTED TO THE DEPARTMENT OF PARKS, RECREATION AND MARINE.
3. ADDRESS PLANS TO PARK DEVELOPMENT OFFICER, 2760 STUDEBAKER ROAD, LONG BEACH, CA 90815.
4. ANY REVISIONS MADE TO APPROVED PLANS SHALL NEED SUBSEQUENT APPROVAL BY THE DIRECTOR OF PARKS, RECREATION AND MARINE BEFORE STARTING THE WORK.
5. PRIOR TO THE ORDERING OF MATERIALS, THE DEVELOPER SHALL PROVIDE ALL SUBMITTALS TO THE DEPARTMENT OF PARKS, RECREATION AND MARINE FOR REVIEW. ADDRESS PLANS TO PARK DEVELOPMENT OFFICER, 2760 STUDEBAKER ROAD, LONG BEACH, CA 90815.
6. ANY PARK PROPERTY, AMENITIES OR IMPROVEMENTS FOUND TO BE DAMAGED AS A RESULT OF CONSTRUCTION ACTIVITIES RELATED TO THE PROJECT SHALL BE REPLACED TO THE SATISFACTION OF THE DIRECTOR OF PARKS, RECREATION AND MARINE.
7. ALL AREAS OF CONSTRUCTION SHALL BE APPROPRIATELY SECURED AND THE CONTRACTOR IS RESPONSIBLE FOR MONITORING THE SITE AND SHALL BE RESPONSIBLE FOR ANY DAMAGE TO THE SITE CAUSED BY VANDALISM AND SHALL BE RESPONSIBLE FOR ANY HOMELESS CLEAN-UP AND REMOVAL COSTS AS A RESULT OF HOMELESS ACTIVITY AT THE SITE.
8. PRIOR TO SITE TURNOVER, THE FOLLOWING SHALL BE FORMALLY SUBMITTED TO THE DEPARTMENT OF PARKS, RECREATION AND MARINE:
   a. FINAL AS-BUILT PLANS (TWO PRINTED COPIES, ONE ELECTRONIC PDF, AND ONE CAD FILE).
   b. PROPERTY DOCUMENTATION, INCLUDING BUT NOT LIMITED TO, SITE SURVEY, RECORDED DEED, FINAL MAP, SOILS REPORT (ONE ELECTRONIC PDF).
   c. OPERATIONS AND MAINTENANCE MANUAL AND WARRANTY INFORMATION FOR ALL SITE FEATURES (ONE PRINTED AND ONE ELECTRONIC PDF). ADDRESS ALL DOCUMENTS TO PARK DEVELOPMENT OFFICER, 2760 STUDEBAKER ROAD, LONG BEACH, CA 90815.
10. PRIOR TO FINAL INSPECTION, THE DEVELOPER SHALL CONTACT THE CITY PARK LANDSCAPE MAINTENANCE SUPERINTENDENT IN THE DEPARTMENT OF PARKS, RECREATION AND MARINE, AT (562) 570-4879, FOLLOWING ALL TREE PLANTING, LANDSCAPING, AND IRRIGATION SYSTEM INSTALLATION. DEPARTMENT STAFF WILL PERFORM A FINAL INSPECTION, IDENTIFY ANY ITEMS FOR A CONTRACTOR PUNCH LIST AND WILL ACCEPT ALL TREE PLANTING, LANDSCAPING, AND IRRIGATION SYSTEM PLACED IN THE PARK.

LEGEND

	RIGHT OF WAY	8"S	SEWER LINE
	PROPERTY LINE	8"W	WATER LINE
	EASEMENT		WATER METER
	PROPOSED SLOPE		STORM DRAIN LINE
271	PROPOSED CONTOURS		STREET LIGHT
GB	GRADE BREAK		CONCRETE PAVING
//	DAYLIGHT		DG TRAIL
	PROPOSED SWALE		PERIMETER WALL (PER SEPARATE PLANS)
	APPROX. LIMITS OF LINER		RETAINING WALL (PER LANDSCAPE PLANS)
258.00 FS	PROPOSED ELEVATION	R R	RIDGE LINE

PREVAILING BUILDING CODES:
2016 EDITION OF THE CALIFORNIA BUILDING CODE
2016 EDITION OF THE CALIFORNIA MECHANICAL CODE
2016 EDITION OF THE CALIFORNIA PLUMBING CODE
2016 EDITION OF THE CALIFORNIA ELECTRICAL CODE
2016 CALIFORNIA ENERGY CODE (TITLE 24)
2016 CALIFORNIA GREEN BUILDING STANDARDS CODE
TITLE 18 OF THE LONG BEACH MUNICIPAL CODE

OWNER:
CITY OF LONG BEACH
411 WEST OCEAN
LONG BEACH, CA 90802
562-570-6383

GEOTECHNICAL ENGINEER:
MAURICE AMENDOLAGINE PE, GE
STANTEC CONSULTING
9665 GRANITE RIDGE DRIVE, SUITE 220
SAN DIEGO, CA 92123-2636
858-633-4296

DEMOLITION NOTES

P	PROTECT IN PLACE ITEM PER PLAN	–	N/A
1	CLEAR AND GRUB AND REMOVE AND DISPOSE OF SITE TRASH	2.15	AC
2	ABATE BUILDING	1	EA
3	REMOVE AND DISPOSE OF BUILDING AND BUILDING FOUNDATION	1	EA
4	REMOVE AND DISPOSE OF BUILDING UTILITY CONNECTIONS AND CAP AT LIMIT OF WORK	1	EA
5	REMOVE AND DISPOSE OF BOLLARD	9	EA
6	REMOVE AND DISPOSE OF CATCH BASIN	3	EA
7	ELECTRICAL POLE TO BE REMOVED PER SCE WORK ORDER	2	EA
8	REMOVE AND DISPOSE OF SIGN	1	EA
9	REMOVE AND DISPOSE OF TREE	7	EA
10	REMOVE AND DISPOSE OF STREET LIGHT	1	EA
11	REMOVE AND DISPOSE OF BUILDING HANDRAIL	40	LF
12	REMOVE AND DISPOSE OF CONCRETE RAMP	2,400	SF
13	REMOVE AND DISPOSE OF CONCRETE WALL	133	LF
14	REMOVE AND DISPOSE OF FENCE	490	LF
15	REMOVE AND DISPOSE OF CURB AND GUTTER OR AC BERM	155	LF
16	REMOVE AND DISPOSE OF PORTION OF 3" GAS LINE FOLLOWING INSTALLATION OF NEW GAS LINE BY OTHERS (UNDER SEPARATE PERMIT)	360	LF
17	CAP AND ABANDON IN PLACE 3" GAS UNDER RAILROAD TRACKS	100	LF
18	REMOVE AND DISPOSE OF STORM DRAIN	470	LF
19	CUT STORM DRAIN LINE AT RAILROAD TRACKS AND BACKFILL WITH 2-SACK SLURRY	25	LF
20	REMOVE AND DISPOSE OF ABANDONED SEWER LINE AND MANHOLES	470	LF
21	REMOVE AND DISPOSE OF WATER VALVE	3	EA
22	REMOVE AND DISPOSE OF WATER METER AND CAP LATERAL (UNDER SEPARATE PERMIT)	1	EA
23	REMOVE AND DISPOSE OF GAS VALVE	1	EA
24	REMOVE AND DISPOSE OF STREET LIGHT FOUNDATION	1	EA
29	REMOVE AND DISPOSE OF CONCRETE	8,600	SF
26	REMOVE AND DISPOSE OF ASPHALT	29,800	SF
27	REMOVE AND DISPOSE OF RAILROAD TRACKS	185	LF

PRECISE GRADING NOTES

30	CONSTRUCT 4" THICK INTEGRAL COLORED CONCRETE WALK, COLOR SHALL BE ADOBE TAN (C-21), MEDIUM ACID ETCH BY LM SCOFIELD, OR APPROVED EQUAL. 800-800-9900, SEE DETAIL A ON SHEET 15. CONTRACTOR SHALL INSTALL THREE 3'X3' MOCKUPS (COLORS C-15, C-21, C-27) FOR CITY REVIEW AND APPROVAL.	13,150	SF
31	CONSTRUCT 6" THICK CONCRETE RAMP WITH #3 @ 24" O.C. EACH WAY PER GEOTECHNICAL RECOMMENDATIONS	950	SF
32	CONSTRUCT 6" THICK PEA GRAVEL SHOULDER	10,500	SF
33	CONSTRUCT 6" ROLLED CURB AND GUTTER PER DETAIL 13 ON SHEET 15	110	LF
34	CONSTRUCT CURB TRANSITION PER DETAIL 15 ON SHEET 15.	XX	LF
35	CONSTRUCT DEMOUNTABLE BOLLARD POSTS PER LANDSCAPE PLAN DETAIL 14 ON SHEET 15	4	EA
36	CONNECT TO EXISTING SIDEWALK	1	EA
37	FURNISH AND INSTALL 6" PVC SDR-35 DRAIN PIPE PER MANUFACTURERS RECOMMENDATIONS	880	LF
38	FURNISH AND INSTALL 6" ATRIUM GRATE PER DETAIL 10 ON SHEET 15	13	EA
39	FURNISH AND INSTALL 6" PVC TEE PER MANUFACTURERS RECOMMENDATIONS	1	EA
40	CORE 6" PVC AREA DRAIN INTO STORM DRAIN CATCH BASIN OR JUNCTION STRUCTURE AND GROUT	3	EA
41	FURNISH AND INSTALL 30 MIL AQUA 30 COEX REINFORCED POLYETHYLENE (RPE) LINER BY WESTERN ENVIRONMENTAL LINER OR APPROVED EQUAL. SEE DETAILS 11 AND 12 ON SHEET 15 FOR INSTALLATION LAYERING	63,893.4	SF
42	FURNISH AND INSTALL 8-OZ NONWOVEN GEOTEXTILE FABRIC BY WESTERN ENVIRONMENTAL OR APPROVED EQUAL OVER IMPERMEABLE LAYER. SEE DETAIL 12 ON SHEET 15 FOR INSTALLATION LAYERING	63,893.4	SF
43	TOP OF LINER ANCHOR PER DETAIL 2 ON SHEET 15	1,000	LF
44	TRUNCATED DOMES	1	SF
45	STANDARD CURB TERMINATION PER DETAIL 8 ON SHEET 15	2	EA
46	ROLLED CURB TERMINATION PER DETAIL 9 ON SHEET 15	1	EA
47	CONSTRUCT LOCAL DEPRESSION PER SPPWD STD. 313-3, CASE B.	1	EA

DOMESTIC AND RECYCLED WATER NOTES

48	ADJUST EXISTING WATER METER TO GRADE	1	EA
49	CONNECT TO EXISTING WATER LINE PER IRRIGATION PLAN	1	EA

STORM DRAIN NOTES

50	FURNISH AND INSTALL 4" DUCTILE IRON PIPE PER LBWD WDS-406	380	LF
51	FURNISH AND INSTALL 12" PVC SDR-35 DRAIN PIPE	125	LF
52	CONSTRUCT 18" RCP (D-LOAD PER PROFILE) WITH BEDDING AND BACKFILL PER CITY OF LONG BEACH STD. 634	830	LF
53	CONSTRUCT JUNCTION STRUCTURE PER SPPWC STANDARD 321	6	EA
54	CONSTRUCT 3'X3' CATCH BASIN PER DETAIL 3 ON SHEET 13 AND STENCIL PER CITY OF LONG BEACH STD. 636	1	EA
55	CONSTRUCT WETLAND POND OUTLET STRUCTURE PER DETAIL 6 ON SHEET 14	1	EA
56	CONSTRUCT MITERED PIPE STRUCTURE PER DETAIL 1 ON SHEET 13	2	EA
59	REMOVE EXISTING PLUG AND CONNECT TO EXISTING	3	EA
60	CONSTRUCT 48" MANHOLE PER LBWD WDS-502	1	EA

DRY UTILITY NOTES

71	FURNISH AND INSTALL 3" GAS LINE PER PLAN. CONNECT TO EXISTING 3" GAS LINE.	610	LF
72	GAS LINE CROSSING DESIGN BY OTHERS	1	EA

SIGNING AND STRIPING NOTES

81	PAINT YELLOW DASHED CENTERLINE PER 2018 CALTRANS STANDARD PLAN A20A DETAIL 1	976	LF
82	PAINT BIKE LANE SYMBOL PER CALTRANS STANDARD PLAN A24C	8	EA
83	PAINT BIKE LANE ARROW SYMBOL PER CALTRANS STANDARD PLAN A24A	8	EA
84	FURNISH AND INSTALL SIGN W11-15 PER 2009 MUTCD	8	EA
85	PAINT CROSSWALK PER CITY OF LONG BEACH STD. 307.	1	EA

EROSION CONTROL NOTES

101	INSTALL FIBER ROLL PER DETAIL 1 ON SHEET 9 AND CASQA BMP SE-5	1,650	LF
102	INSTALL MODIFIED INLET PROTECTION PER DETAIL 2 ON SHEET 9 AND CASQA BMP SE-10	14	EA
103	INSTALL MODIFIED STABILIZED CONSTRUCTION ENTRANCE/EXIT PER DETAIL 4 ON SHEET 9 AND CASQA BMP TC-1	1	EA
104	INSTALL GRAVEL BAG BARRIER PER DETAIL 3 ON SHEET 9 AND CASQA BMP SE-6	40	LF
105	INSTALL HYDROMULCH PER MANUFACTURERS RECOMMENDATION AND CASQA BMP EC-3	46,700	SF
106	PROVIDE STREET SWEEPING AND VACUUMING PER CASQA BMP SC-7	1	EA
107	PROVIDE STREET SWEEPING AND VACUUMING PER CASQA BMP SC-7	1	EA

REVISIONS

No.	DATE	SHEET	APPROVAL	DESCRIPTION

AS-BUILT: REF.

DESIGNED BY:
DRAWN BY:
DESIGN CHECK BY:
DRAFTING CHECK BY:

REGISTERED PROFESSIONAL ENGINEER ROGER T. CHUNG No. C65388 STATE OF CALIFORNIA CIVIL

Stantec

Stantec Consulting Ltd.
38 Technology Drive
Irvine, Ca.
92618-5312
Tel. 949.923.6000
Fax. 949.923.6121
www.stantec.com

Long Beach Municipal Urban Stormwater Treatment (MUST)
Phase 1C - Wetlands - 903 Fairbanks Ave
TITLE SHEET

GRAPHIC SCALE
PAGE
FIELD BOOK

JOB NO. X
NO. R-
SHEET 1 OF 28
DRAWING NO. C-1

LAST SAVED BY: ejwalker
PLOT DATE: Nov. 5, 20 SAVED PATH: C:\pwworkdir\d0489025

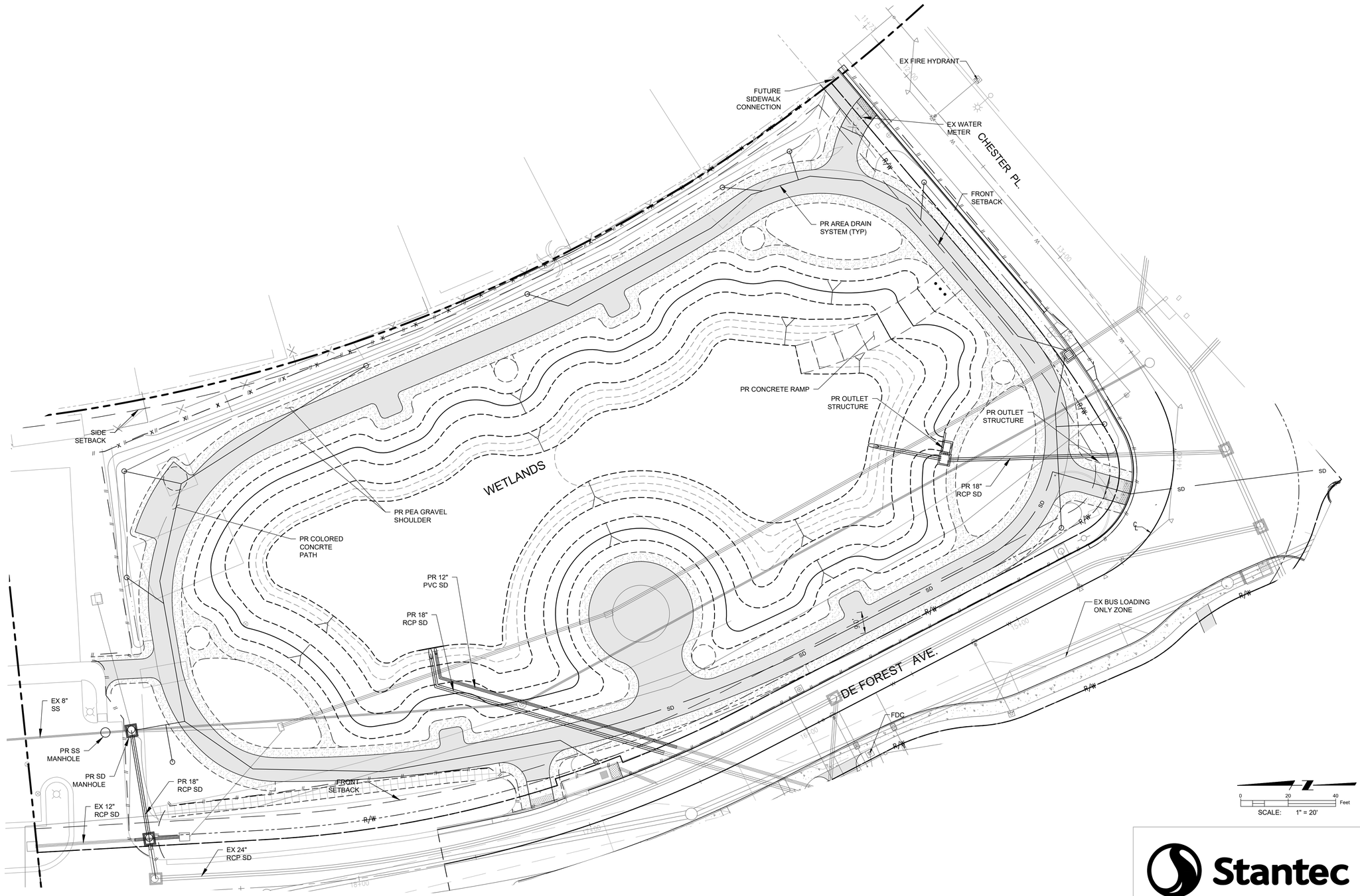

Stantec

Stantec Consulting Ltd.
38 Technology Drive
Irvine, Ca.
92618-5312
Tel. 949.923.6000
Fax. 949.923.6121
www.stantec.com

REVISIONS

No.	DATE	SHEET	APPROVAL	DESCRIPTION

AS-BUILT:

REF.

DESIGNED BY:
DRAWN BY:
DESIGN CHECK BY:
DRAFTING CHECK BY:

REGISTERED PROFESSIONAL ENGINEER ROGER T. CHUNG No. C65388 CIVIL STATE OF CALIFORNIA

Long Beach Municipal Urban Stormwater Treatment (MUST)
Phase 1C - Wetlands - 903 Fairbanks Ave
SITE PLAN

GRAPHIC SCALE

PAGE

FIELD BOOK

JOB NO. X

NO. R-

SHEET 2 OF 28

DRAWING NO. C-2

LAST SAVED BY: ejwalker
PLOT DATE: Nov. 4, 20 SAVED PATH: C:\pwworkdir\d0489025

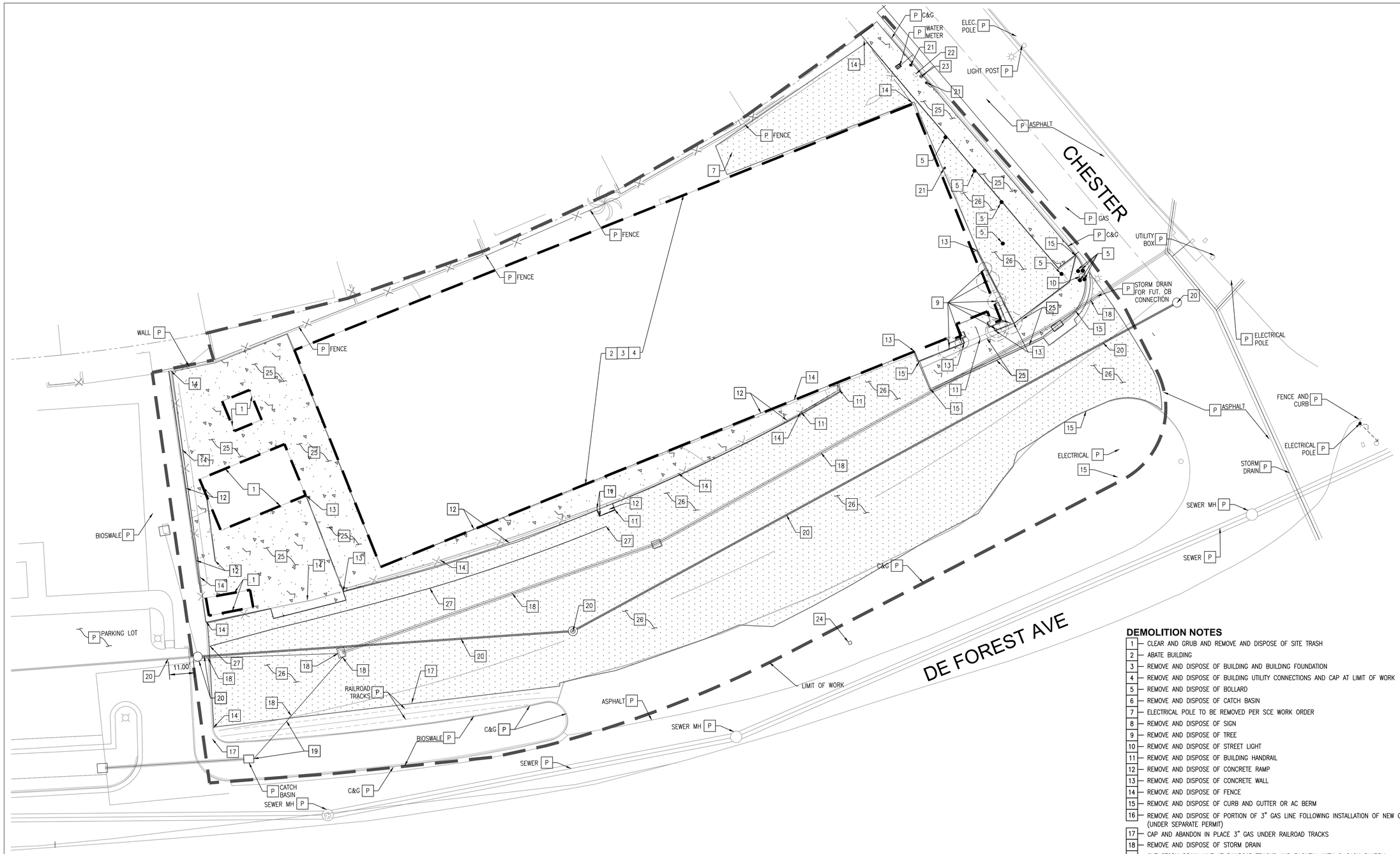

DEMOLITION NOTES

1 — CLEAR AND GRUB AND REMOVE AND DISPOSE OF SITE TRASH
2 — ABATE BUILDING
3 — REMOVE AND DISPOSE OF BUILDING AND BUILDING FOUNDATION
4 — REMOVE AND DISPOSE OF BUILDING UTILITY CONNECTIONS AND CAP AT LIMIT OF WORK
5 — REMOVE AND DISPOSE OF BOLLARD
6 — REMOVE AND DISPOSE OF CATCH BASIN
7 — ELECTRICAL POLE TO BE REMOVED PER SCE WORK ORDER
8 — REMOVE AND DISPOSE OF SIGN
9 — REMOVE AND DISPOSE OF TREE
10 — REMOVE AND DISPOSE OF STREET LIGHT
11 — REMOVE AND DISPOSE OF BUILDING HANDRAIL
12 — REMOVE AND DISPOSE OF CONCRETE RAMP
13 — REMOVE AND DISPOSE OF CONCRETE WALL
14 — REMOVE AND DISPOSE OF FENCE
15 — REMOVE AND DISPOSE OF CURB AND GUTTER OR AC BERM
16 — REMOVE AND DISPOSE OF PORTION OF 3" GAS LINE FOLLOWING INSTALLATION OF NEW GAS LINE BY OTHERS (UNDER SEPARATE PERMIT)
17 — CAP AND ABANDON IN PLACE 3" GAS UNDER RAILROAD TRACKS
18 — REMOVE AND DISPOSE OF STORM DRAIN
19 — CUT STORM DRAIN LINE AT RAILROAD TRACKS AND BACKFILL WITH 2-SACK SLURRY
20 — REMOVE AND DISPOSE OF ABANDONED SEWER LINE AND MANHOLES
21 — REMOVE AND DISPOSE OF WATER VALVE
22 — REMOVE AND DISPOSE OF WATER METER AND CAP LATERAL (UNDER SEPARATE PERMIT)
23 — REMOVE AND DISPOSE OF GAS VALVE
24 — REMOVE AND DISPOSE OF STREET LIGHT FOUNDATION
29 — REMOVE AND DISPOSE OF CONCRETE
26 — REMOVE AND DISPOSE OF ASPHALT
27 — REMOVE AND DISPOSE OF RAILROAD TRACKS
P — PROTECT IN PLACE ITEM PER PLAN

0 20 40 Feet

Stantec
Stantec Consulting Ltd.
38 Technology Drive
Irvine, Ca.
92618-5312
Tel. 949.923.6000
Fax. 949.923.6121
www.stantec.com

REVISIONS				
No.	DATE	SHEET	APPROVAL	DESCRIPTION
AS-BUILT:				REF.

DESIGNED BY:
DRAWN BY:
DESIGN CHECK BY:
DRAFTING CHECK BY:

REGISTERED PROFESSIONAL ENGINEER
ROGER T. CHUNG
No. C65388
CIVIL
STATE OF CALIFORNIA

Long Beach Municipal Urban Stormwater Treatment (MUST)
Phase 1C - Wetlands - 903 Fairbanks Ave
DEMOLITION PLAN

GRAPHIC SCALE
PAGE
FIELD BOOK

JOB NO. X
NO. R-
SHEET 3 OF 28
DRAWING NO. C-3

LAST SAVED BY: ejwalker
PLOT DATE: Nov. 5, 20 SAVED PATH: C:\pwworkdir\d0489025

DESIGN ELEVATION LEGEND

100.00	ENGINEERED DESIGN ELEVATION
(100.00)	POTHOLED ELEVATION
[100.00]	ELEVATIONS SHOWN ARE APPROXIMATE. CONTRACTOR HAS TO POTHOLE EXISTING STORM DRAIN TO VERIFY ELEVATIONS. CONTRACTOR SHALL FIELD VERIFY ALL ELEVATIONS AND NOTIFY THE ENGINEER OF RECORD OF ANY DISCREPANCY PRIOR TO COMMENCEMENT OF WORK

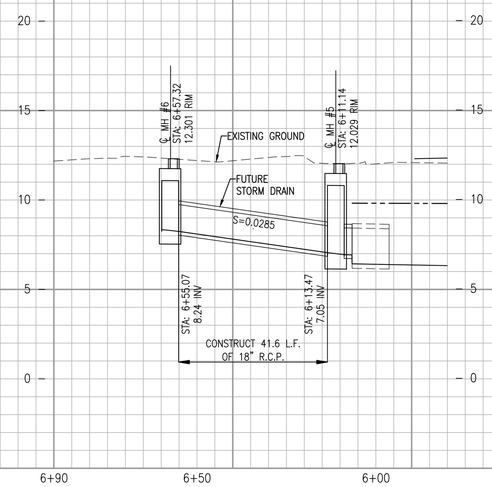

SD-A PROFILE

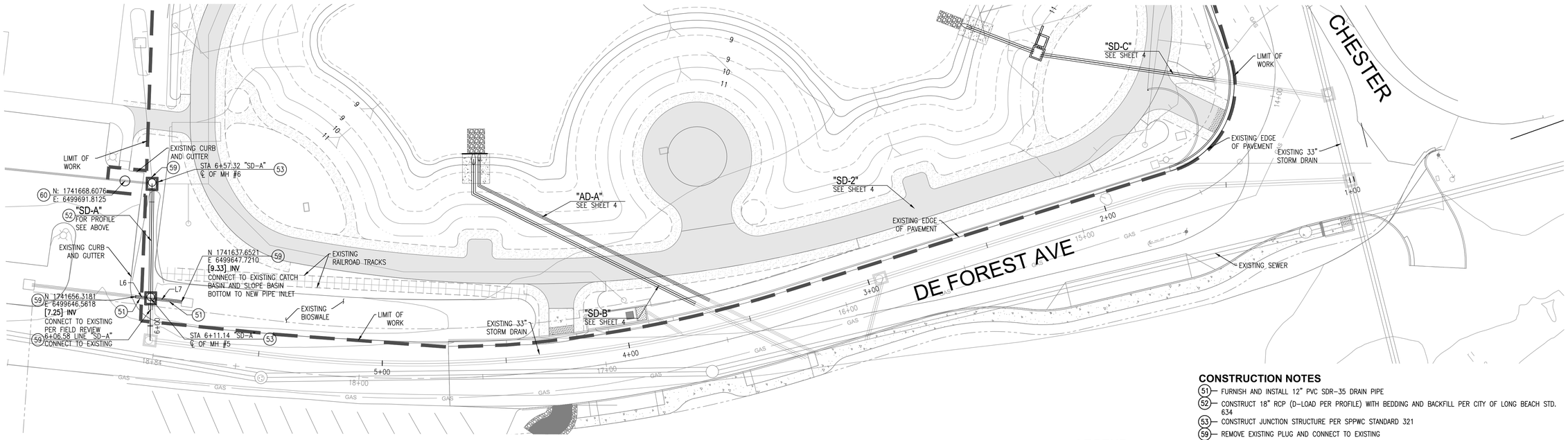

LINE TABLE		
LINE No.	LENGTH	DIRECTION
L6	6.10	N03°30'19"W
L7	12.61	S03°34'37"E

LEGEND

- PAVEMENT AND CURB REMOVE AND REPLACE
- CONCRETE/ASPHALT
- DG AREA
- RIPRAP
- LIMIT OF WORK

CONSTRUCTION NOTES

51 — FURNISH AND INSTALL 12" PVC SDR-35 DRAIN PIPE

52 — CONSTRUCT 18" RCP (D-LOAD PER PROFILE) WITH BEDDING AND BACKFILL PER CITY OF LONG BEACH STD. 634

53 — CONSTRUCT JUNCTION STRUCTURE PER SPPWC STANDARD 321

59 — REMOVE EXISTING PLUG AND CONNECT TO EXISTING

60 — CONSTRUCT 48" MANHOLE PER LBWD WDS-502

0 20 40 Feet

PROFILE SCALE
HORIZONTAL: 1"=20'
VERTICAL: 1"=4'

REVISIONS

No.	DATE	SHEET	APPROVAL	DESCRIPTION

REF.

AS-BUILT:

DESIGNED BY:
DRAWN BY:
DESIGN CHECK BY:
DRAFTING CHECK BY:

REGISTERED PROFESSIONAL ENGINEER
ROGER T. CHUNG
No. C65388
CIVIL
STATE OF CALIFORNIA

Long Beach Municipal Urban Stormwater Treatment (MUST) Phase 1C - Wetlands - 903 Fairbanks Ave

STORM DRAIN PLAN AND PROFILE (1 OF 2)

GRAPHIC SCALE

PAGE

FIELD BOOK

JOB NO. X

NO. R-

SHEET 4 OF 28

DRAWING NO. C-4

Stantec

Stantec Consulting Ltd.
38 Technology Drive
Irvine, Ca.
92618-5312
Tel. 949.923.6000
Fax. 949.923.6121
www.stantec.com

LAST SAVED BY: ejwalker
PLOT DATE: Nov. 4, 20 SAVED PATH: C:\pwworkdir\d0489025

DESIGN ELEVATION LEGEND

100.00 ENGINEERED DESIGN ELEVATION

(100.00) POTHOLED ELEVATION

[100.00] ELEVATIONS SHOWN ARE APPROXIMATE. CONTRACTOR HAS TO POTHOLE EXISTING STORM DRAIN TO VERIFY ELEVATIONS. CONTRACTOR SHALL FIELD VERIFY ALL ELEVATIONS AND NOTIFY THE ENGINEER OF RECORD OF ANY DISCREPANCY PRIOR TO COMMENCEMENT OF WORK

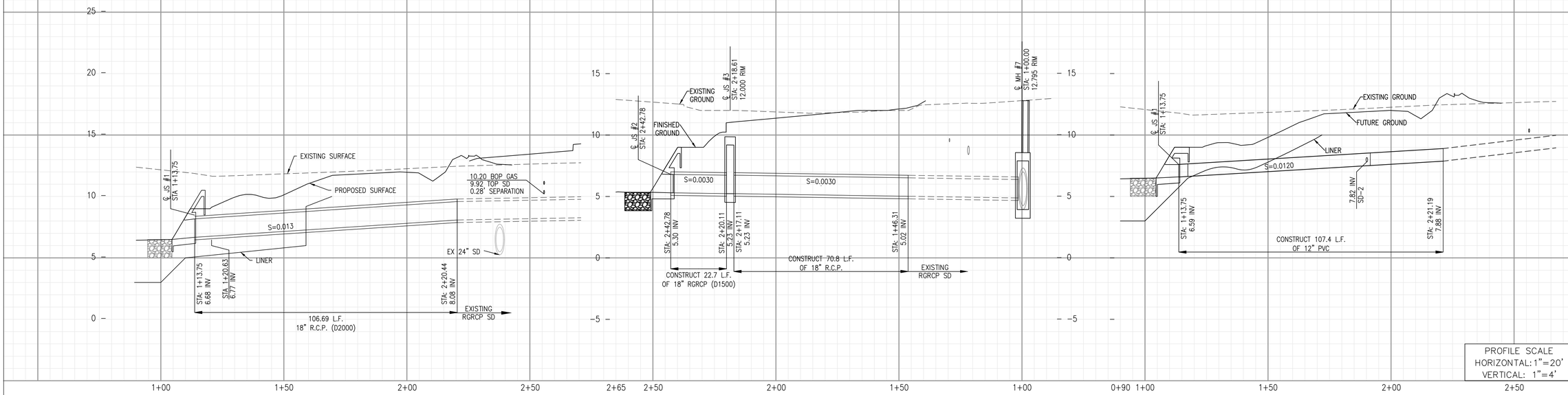

SD-B PROFILE

SD-C PROFILE

LINE "AD-A"

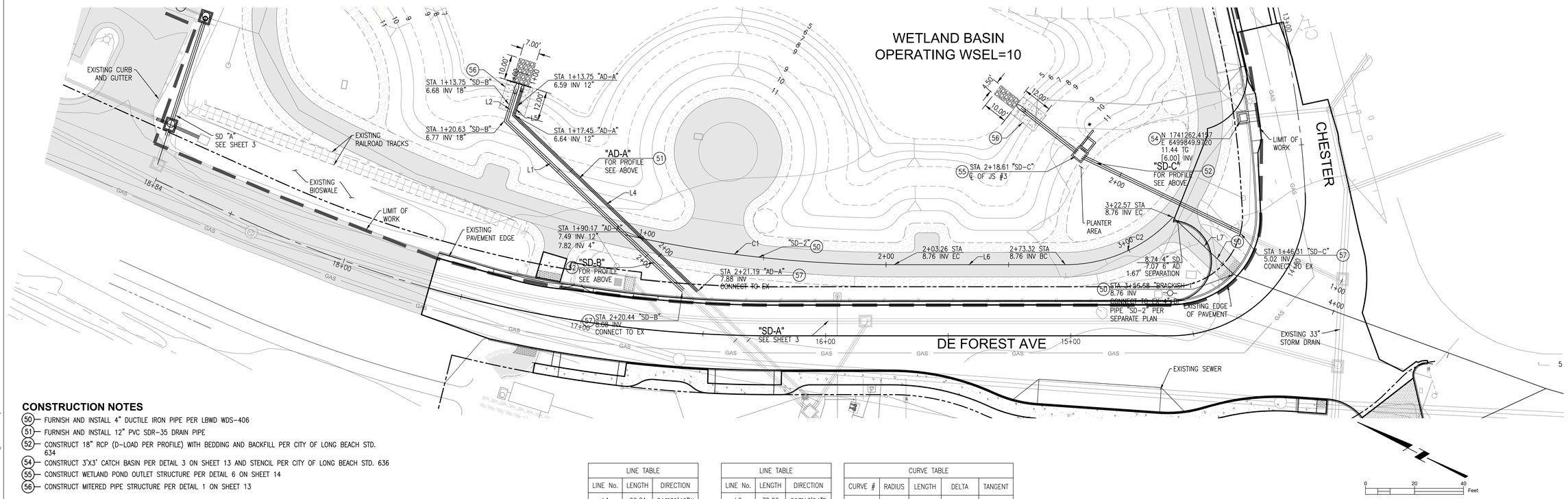

CONSTRUCTION NOTES

(50)— FURNISH AND INSTALL 4" DUCTILE IRON PIPE PER LBWD WDS-406

(51)— FURNISH AND INSTALL 12" PVC SDR-35 DRAIN PIPE

(52)— CONSTRUCT 18" RCP (D-LOAD PER PROFILE) WITH BEDDING AND BACKFILL PER CITY OF LONG BEACH STD. 634

(54)— CONSTRUCT 3'X3' CATCH BASIN PER DETAIL 3 ON SHEET 13 AND STENCIL PER CITY OF LONG BEACH STD. 636

(55)— CONSTRUCT WETLAND POND OUTLET STRUCTURE PER DETAIL 6 ON SHEET 14

(56)— CONSTRUCT MITERED PIPE STRUCTURE PER DETAIL 1 ON SHEET 13

LINE TABLE		
LINE No.	LENGTH	DIRECTION
L1	99.81	S16°32'40"W
L2	20.63	S80°05'17"W
L4	103.75	S16°32'39"W
L5	17.45	S80°05'17"W

LINE TABLE		
LINE No.	LENGTH	DIRECTION
L6	70.06	S27°13'54"E
L7	34.11	S16°01'56"W

CURVE TABLE				
CURVE #	RADIUS	LENGTH	DELTA	TANGENT
C2	59.00	49.251	47°49'41"	26.16
C1	499.00	103.260	11°51'23"	51.81

Stantec

Stantec Consulting Ltd.
38 Technology Drive
Irvine, Ca.
92618-5312
Tel. 949.923.6000
Fax. 949.923.6121
www.stantec.com

REVISIONS

No.	DATE	SHEET	APPROVAL	DESCRIPTION

AS-BUILT: REF.

DESIGNED BY: DRAWN BY: DESIGN CHECK BY: DRAFTING CHECK BY:

REGISTERED PROFESSIONAL ENGINEER ROGER T. CHUNG No. C65388 CIVIL STATE OF CALIFORNIA

Long Beach Municipal Urban Stormwater Treatment (MUST)
Phase 1C - Wetlands - 903 Fairbanks Ave
STORM DRAIN PLAN AND PROFILE (2 OF 2)

GRAPHIC SCALE

PAGE

FIELD BOOK

JOB NO. X

NO. R-

SHEET 5 OF 28

DRAWING NO. C-5

LAST SAVED BY: ejwalker
PLOT DATE: Nov. 4, 20 SAVED PATH: C:\pwworkdir\d0489025

CONSTRUCTION NOTES

30 — CONSTRUCT 4" THICK INTEGRAL COLORED CONCRETE WALK, COLOR SHALL BE ADOBE TAN (C-21), MEDIUM ACID ETCH BY LM SCOFIELD, OR APPROVED EQUAL. 800-800-9900, SEE DETAIL A ON SHEET 15. CONTRACTOR SHALL INSTALL THREE 3'X3' MOCKUPS (COLORS C-15, C-21, C-27) FOR CITY REVIEW AND APPROVAL.

32 — CONSTRUCT 6" THICK PEA GRAVEL SHOULDER

36 — CONNECT TO EXISTING SIDEWALK

37 — FURNISH AND INSTALL 6" PVC SDR-35 DRAIN PIPE PER MANUFACTURERS RECOMMENDATIONS

38 — FURNISH AND INSTALL 6" ATRIUM GRATE PER DETAIL 10 ON SHEET 15

39 — FURNISH AND INSTALL 6" PVC TEE PER MANUFACTURERS RECOMMENDATIONS

40 — CORE 6" PVC AREA DRAIN INTO STORM DRAIN CATCH BASIN OR JUNCTION STRUCTURE AND GROUT

41 — FURNISH AND INSTALL 30 MIL AQUA 30 COEX REINFORCED POLYETHYLENE (RPE) LINER BY WESTERN ENVIRONMENTAL LINER OR APPROVED EQUAL. SEE DETAILS 11 AND 12 ON SHEET 15 FOR INSTALLATION LAYERING

42 — FURNISH AND INSTALL 8-OZ NONWOVEN GEOTEXTILE FABRIC BY WESTERN ENVIRONMENTAL OR APPROVED EQUAL OVER IMPERMEABLE LAYER. SEE DETAIL 12 ON SHEET 15 FOR INSTALLATION LAYERING

43 — TOP OF LINER ANCHOR PER DETAIL 2 ON SHEET 15

44 — TRUNCATED DOMES

45 — STANDARD CURB TERMINATION PER DETAIL 8 ON SHEET 15

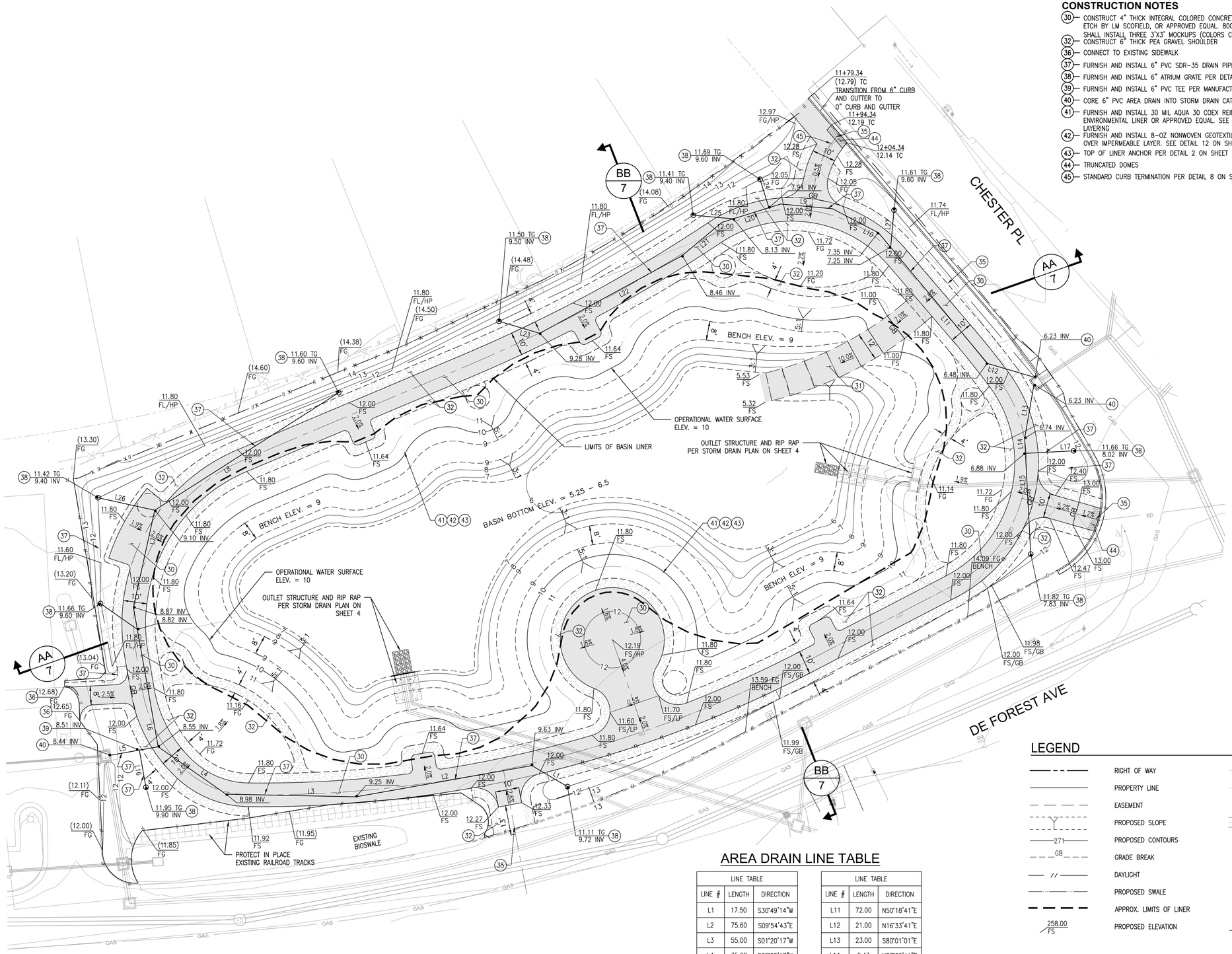

LEGEND

	RIGHT OF WAY	8"S	SEWER LINE
	PROPERTY LINE	8"W	WATER LINE
	EASEMENT		WATER METER
	PROPOSED SLOPE		STORM DRAIN LINE
271	PROPOSED CONTOURS		STREET LIGHT
GB	GRADE BREAK		CONCRETE PAVING
//	DAYLIGHT		DG TRAIL
	PROPOSED SWALE		PERIMETER WALL (PER SEPARATE PLANS)
	APPROX. LIMITS OF LINER		RETAINING WALL (PER LANDSCAPE PLANS)
258.00 FS	PROPOSED ELEVATION	R R	RIDGE LINE

0 20 40 Feet

AREA DRAIN LINE TABLE

LINE TABLE		
LINE #	LENGTH	DIRECTION
L1	17.50	S30°49'14"W
L2	75.60	S09°54'43"E
L3	55.00	S01°20'17"W
L4	35.00	S35°05'17"W
L5	21.00	S09°54'43"E
L6	60.00	N80°05'17"E
L7	42.00	S77°24'43"E
L8	92.34	S32°24'43"E
L9	22.00	N05°18'41"E
L10	22.00	N27°48'41"E

LINE TABLE		
LINE #	LENGTH	DIRECTION
L11	72.00	N50°18'41"E
L12	21.00	N16°33'41"E
L13	23.00	S80°01'01"E
L14	6.43	N87°09'41"E
L15	42.70	N87°09'41"E

*SEE SHEET 8 FOR TRAIL HORIZONTAL CONTROL

No.	DATE	SHEET	APPROVAL	DESCRIPTION

REVISIONS

DESIGNED BY:
DRAWN BY:
DESIGN CHECK BY:
DRAFTING CHECK BY:
AS-BUILT:
REF.

REGISTERED PROFESSIONAL ENGINEER ROCKY T. CHUNG No. C65388 CIVIL STATE OF CALIFORNIA

Long Beach Municipal Urban Stormwater Treatment (MUST)
Phase 1C - Wetlands - 903 Fairbanks Ave
PRECISE GRADING PLAN

GRAPHIC SCALE
PAGE
FIELD BOOK

JOB NO. X
NO. R-
SHEET 6 OF 28
DRAWING NO. C-6

Stantec
Stantec Consulting Ltd.
38 Technology Drive
Irvine, Ca.
92618-5312
Tel. 949.923.6000
Fax. 949.923.6121
www.stantec.com

LAST SAVED BY: ejwalker
PLOT DATE: Nov. 4, 20 SAVED PATH: C:\pwworkdir\d0489025

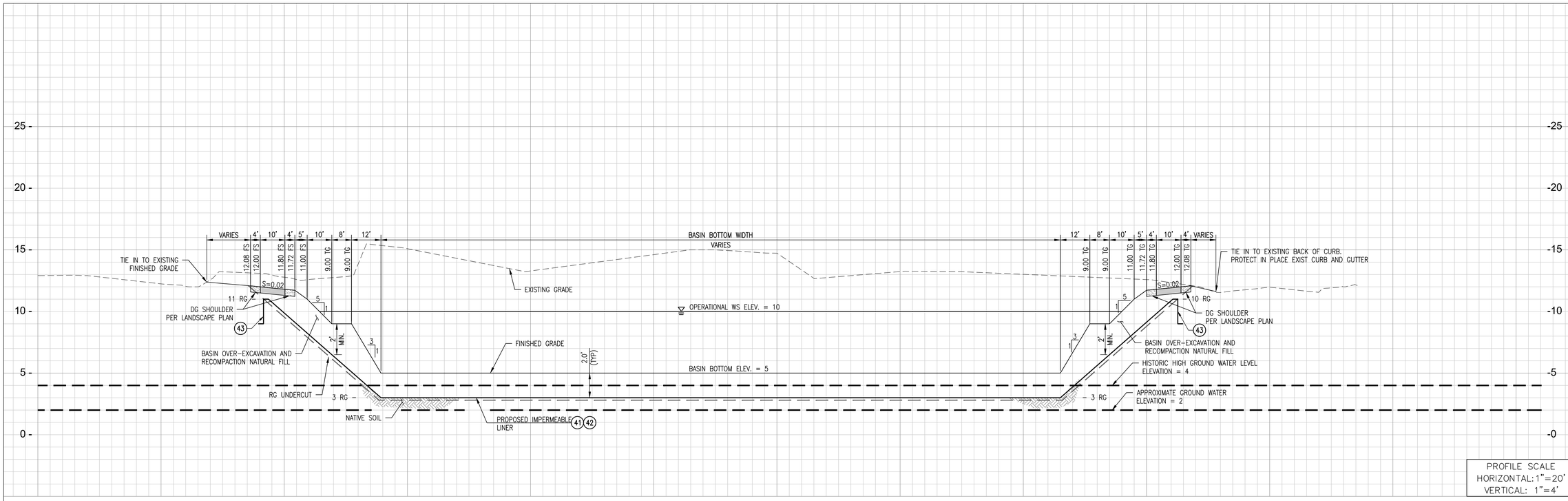

PROFILE SCALE
HORIZONTAL: 1"=20'
VERTICAL: 1"=4'

SECTION AA

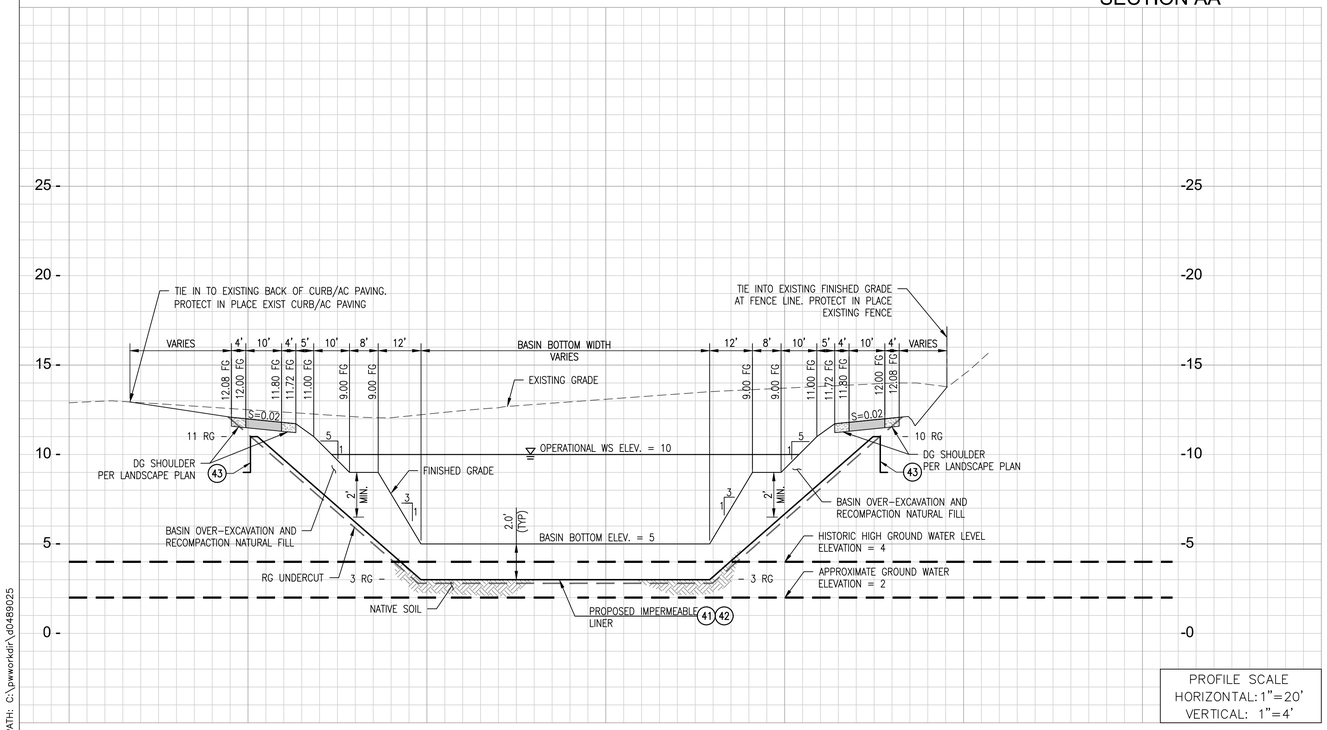

PROFILE SCALE
HORIZONTAL: 1"=20'
VERTICAL: 1"=4'

SECTION BB

LEGEND

- EXISTING GROUND
- PROPOSED FINISHED GROUND
- IMPERMEABLE LINER
- ROUGH GRADE UNDERCUT
- APPROX. GROUND WATER LEVEL

CONSTRUCTION NOTES

41 — FURNISH AND INSTALL 30 MIL AQUA 30 COEX REINFORCED POLYETHYLENE (RPE) LINER BY WESTERN ENVIRONMENTAL LINER OR APPROVED EQUAL. SEE DETAILS 11 AND 12 ON SHEET 15 FOR INSTALLATION LAYERING

42 — FURNISH AND INSTALL 8-OZ NONWOVEN GEOTEXTILE FABRIC BY WESTERN ENVIRONMENTAL OR APPROVED EQUAL OVER IMPERMEABLE LAYER. SEE DETAIL 12 ON SHEET 15 FOR INSTALLATION LAYERING

43 — TOP OF LINER ANCHOR PER DETAIL 2 ON SHEET 15

REVISIONS				
No.	DATE	SHEET	APPROVAL	DESCRIPTION

AS-BUILT: REF.

DESIGNED BY: DRAWN BY: DESIGN CHECK BY: DRAFTING CHECK BY:

REGISTERED PROFESSIONAL ENGINEER ROGER T. CHUNG No. C65388 CIVIL STATE OF CALIFORNIA

Long Beach Municipal Urban Stormwater Treatment (MUST)
Phase 1C - Wetlands - 903 Fairbanks Ave
PRECISE GRADING SECTIONS

GRAPHIC SCALE
PAGE
FIELD BOOK

Stantec
Stantec Consulting Ltd.
38 Technology Drive
Irvine, Ca.
92618-5312
Tel. 949.923.6000
Fax. 949.923.6121
www.stantec.com

JOB NO. X
NO. R-
SHEET 7 OF 28
DRAWING NO. C-7

LAST SAVED BY: ejwalker
PLOT DATE: Nov. 4, 20 SAVED PATH: C:\pwworkdir\d0489025

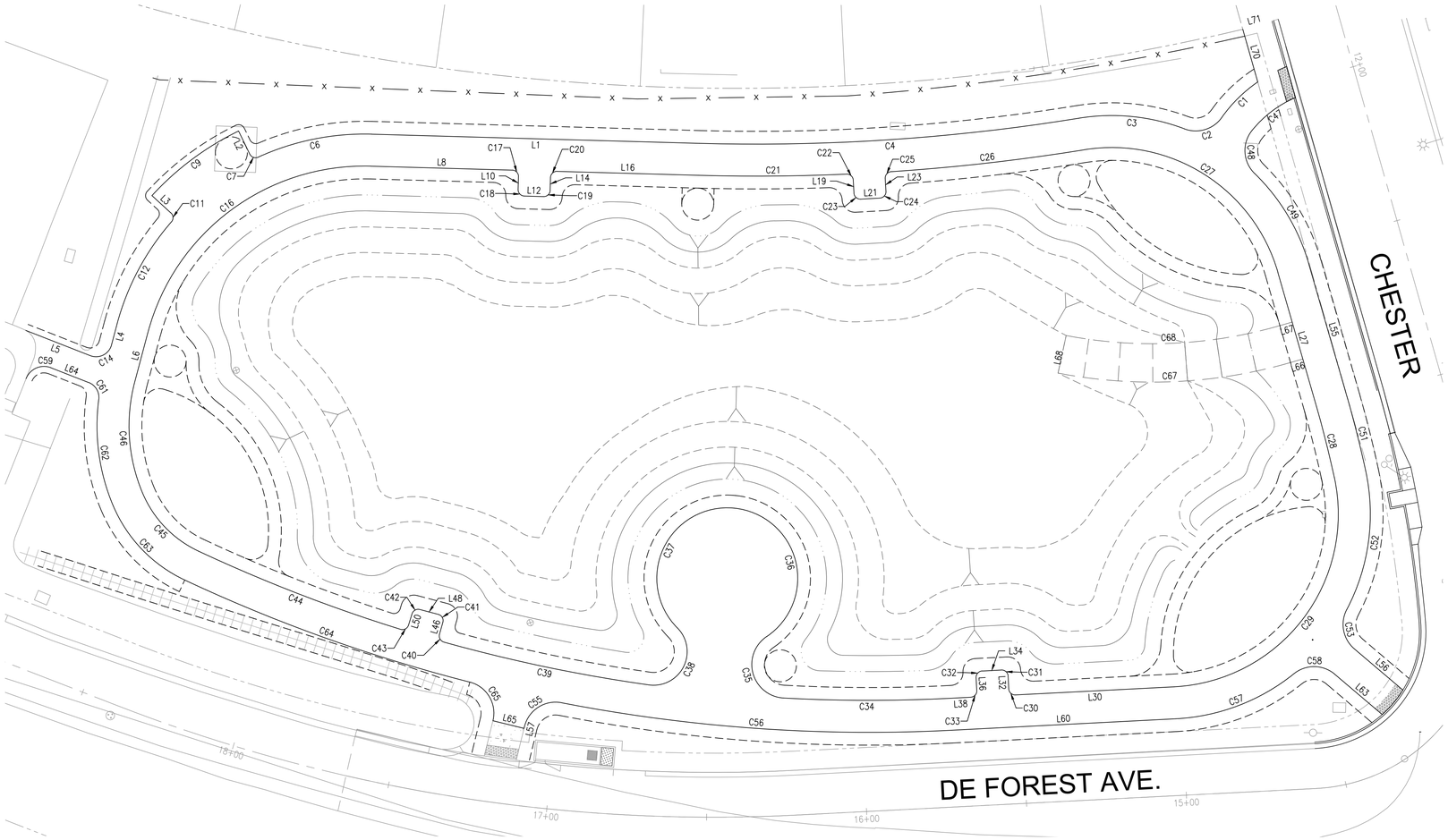

LINE TABLE		
LINE #	LENGTH	DIRECTION
L1	102.40	N22°41'53"W
L2	8.02	N39°46'55"E
L3	8.02	S18°10'05"W
L4	6.67	S80°36'25"W
L5	21.62	N02°53'35"W
L6	15.88	N80°36'25"E
L8	44.20	S22°41'53"E
L10	4.00	S67°18'07"W
L12	6.00	S22°41'53"E
L14	4.00	N67°18'07"E
L16	44.20	S22°41'53"E
L19	4.04	S62°33'08"W
L21	6.00	S27°26'52"E
L23	4.04	N62°33'08"E
L27	43.92	S49°38'12"W
L30	49.65	N27°13'54"W
L32	4.00	N62°46'06"E
L34	6.00	N27°13'54"W
L36	4.00	S62°46'06"W
L38	6.41	N27°13'54"W

LINE TABLE		
LINE #	LENGTH	DIRECTION
L46	3.86	N81°31'56"E
L48	6.00	N09°29'41"W
L50	3.69	S82°42'20"W
L55	43.92	S49°38'12"W
L56	19.89	S16°01'56"W
L57	0.58	N79°28'36"E
L60	70.06	S27°13'54"E
L63	19.45	S16°01'56"W
L64	12.66	S02°53'35"E
L65	10.00	S10°31'24"E
L66	4.28	N40°21'48"W
L67	4.28	N40°21'48"W
L68	12.00	S77°52'26"W
L70	17.10	S49°51'13"W
L71	9.50	S40°08'47"E

CURVE TABLE				
CURVE #	LENGTH	RADIUS	DELTA	TANGENT
C1	15.86'	45.00'	20°11'28"	8.01'
C2	13.17'	10.00'	75°27'18"	7.74'
C3	33.42'	64.00'	29°55'19"	17.10'
C4	118.99'	632.00'	10°47'16"	59.67'
C6	36.47'	80.00'	26°07'21"	18.56'
C7	3.09'	2.00'	88°36'09"	1.95'
C9	33.95'	90.00'	21°36'50"	17.18'
C11	3.09'	2.00'	88°36'09"	1.95'
C12	36.53'	80.00'	26°09'49"	18.59'
C14	8.42'	5.00'	96°30'01"	5.60'
C16	93.70'	70.00'	76°41'42"	55.38'
C17	3.14'	2.00'	90°00'00"	2.00'
C18	3.14'	2.00'	90°00'00"	2.00'
C19	3.14'	2.00'	90°00'00"	2.00'
C20	3.14'	2.00'	90°00'00"	2.00'
C21	46.24'	642.00'	4°07'36"	23.13'
C22	3.12'	2.00'	89°22'38"	1.98'
C23	3.14'	2.00'	90°00'00"	2.00'
C24	3.14'	2.00'	90°00'00"	2.00'
C25	3.12'	2.00'	89°22'38"	1.98'

CURVE TABLE				
CURVE #	LENGTH	RADIUS	DELTA	TANGENT
C26	60.68'	642.00'	5°24'55"	30.36'
C27	78.34'	54.00'	83°07'21"	47.88'
C28	22.53'	360.00'	3°35'08"	11.27'
C29	93.62'	54.00'	99°19'46"	63.60'
C30	3.14'	2.00'	90°00'00"	2.00'
C31	3.14'	2.00'	90°00'00"	2.00'
C32	3.14'	2.00'	90°00'00"	2.00'
C33	3.14'	2.00'	90°00'00"	2.00'
C34	52.05'	494.00'	6°02'13"	26.05'
C35	26.19'	10.50'	142°53'43"	31.29'
C36	53.93'	22.00'	140°26'30"	61.18'
C37	53.93'	22.00'	140°26'30"	61.18'
C38	26.19'	10.50'	142°53'43"	31.29'
C39	65.41'	494.00'	7°35'13"	32.75'
C40	3.15'	2.00'	90°13'58"	2.01'
C41	3.18'	2.00'	91°01'37"	2.04'
C42	3.06'	2.00'	87°47'59"	1.92'
C43	3.15'	2.00'	90°13'58"	2.01'
C44	67.77'	494.00'	7°51'37"	33.94'
C45	25.68'	35.00'	42°01'52"	13.45'

CURVE TABLE				
CURVE #	LENGTH	RADIUS	DELTA	TANGENT
C46	35.64'	54.00'	37°49'05"	18.50'
C47	17.25'	35.00'	28°14'10"	8.80'
C48	14.75'	10.00'	84°29'00"	9.08'
C49	33.23'	64.00'	29°44'49"	17.00'
C51	23.19'	369.81'	3°35'36"	11.60'
C52	44.69'	64.00'	40°00'28"	23.30'
C53	13.51'	10.00'	77°24'53"	8.01'
C55	15.22'	10.00'	87°12'44"	9.52'
C56	122.45'	504.00'	13°55'14"	61.53'
C57	40.13'	64.00'	35°55'43"	20.75'
C58	13.82'	10.00'	79°11'33"	8.27'
C59	9.45'	6.00'	90°16'09"	6.03'
C61	6.63'	5.00'	76°01'32"	3.91'
C62	33.85'	64.00'	30°18'10"	17.33'
C63	33.01'	45.00'	42°01'52"	17.29'
C64	94.69'	504.00'	10°45'52"	47.48'
C65	15.61'	10.00'	89°26'34"	9.90'
C67	75.91'	155.00'	28°03'32"	38.73'
C68	69.99'	143.00'	28°02'38"	35.71'

0 20 40 Feet

Stantec

Stantec Consulting Ltd.
38 Technology Drive
Irvine, Ca.
92618-5312
Tel. 949.923.6000
Fax. 949.923.6121
www.stantec.com

REVISIONS

No.	DATE	SHEET	APPROVAL	DESCRIPTION

DESIGNED BY:
DRAWN BY:
DESIGN CHECK BY:
DRAFTING CHECK BY:

AS-BUILT:
REF.

REGISTERED PROFESSIONAL ENGINEER
ROGER T. CHUNG
No. C65388
CIVIL
STATE OF CALIFORNIA

Long Beach Municipal Urban Stormwater Treatment (MUST)
Phase 1C - Wetlands - 903 Fairbanks Ave
HORIZONTAL CONTROL PLAN

GRAPHIC SCALE
PAGE
FIELD BOOK

JOB NO. X
NO. R-
SHEET 8 OF 28
DRAWING NO. C-8

LAST SAVED BY: ejwalker
PLOT DATE: Nov. 4, 20 SAVED PATH: C:\pwworkdir\d0489025

EROSION AND SEDIMENT CONTROL PLAN (ESCP) GENERAL NOTES:

1. In case of emergency, call MELISSA YOU at 562-570-5524
   i. Please fill in name and number
2. Total Disturbed Area 3.72 AC WDID #
   i. Risk Level (1) 2 3
3. A stand-by crew for emergency work shall be available at all times during the rainy season (November 1 to April 15). Necessary materials shall be available on-site and stockpiled at convenient locations to facilitate rapid construction of emergency devices when rain is imminent.
4. Erosion control devices shown on this plan may be removed when approved by the Building Official if the grading operation has progressed to the point where they are no longer required.
5. Graded areas adjacent to fill slopes located at the site perimeter must drain away from the top of slope at the conclusion of each working day. All loose soils and debris that may create a potential hazard to off-site property shall be stabilized or removed from the site on a daily basis.
6. All silt and debris shall be removed from all devices within 24 hours after each rainstorm and be disposed of properly.
7. A guard shall be posted on the site whenever the depth of water in any device exceeds two feet. The device shall be drained or pumped dry within 24 hours after each rainstorm. Pumping and draining of all basins and drainage devices must comply must comply with the appropriate BMP for dewatering operations.
8. The placement of additional devices to reduce erosion damage and contain pollutants within the site is left to the discretion of the Field Engineer. Additional devices as needed shall be installed to retain sediments and other pollutants on site.
9. Desilting basins may not be removed or made inoperable between November 1 and April 15 of the following year without the approval of the Building Official.
10. Storm Water Pollution and Erosion Control devices are to be modified, as needed, as the project progresses, the design and placement of these devices is the responsibility of the field engineer. Plans representing changes must be submitted for approval if requested by the Building Official.
11. Every effort should be made to eliminate the discharge of non-storm water from the project sites at all times.
12. Eroded sediments and other pollutants must be retained on-site and may not be transported from the site via sheet flow, swales, area drains, natural drainage courses, or wind.
13. Stockpiles of earth and other construction-related materials must be protected from being transported from the site by the forces of wind or water.
14. Fuels, oils, solvents, and other toxic materials must be stored in accordance with their listing and are not to contaminate the soils and surface waters. All approved storage containers are to be protected from the weather. Spills must be cleaned up immediately and disposed of in a proper manner. Spills may not be washed into the drainage system.
15. Excess or waste concrete may not be washed into the public way or any other drainage system. Provisions shall be made to retain concrete wastes on-site until they can be disposed of as solid waste.
16. Developers/contractors are responsible to inspect all Erosion Control Devices and BMPs are installed and functioning properly if there is a 50% or greater probability of predicted precipitation, and after actual precipitation. A construction site inspection checklist and inspection log shall be maintained at the project site at all times and available for review by the Building Official (copies of the self-inspection check list and inspection logs are available upon request).
17. Trash and construction-related solid wastes must be deposited into a covered receptacle to prevent contamination of rainwater and dispersal by wind.
18. Sediments and other materials may not be tracked from the site by vehicle traffic. The construction entrance roadways must be stabilized so as to inhibit sediments from being deposited into the public way. Accidental depositions must be swept up immediately and may not be washed down by rain or other means.
19. Any slopes with disturbed soils or denuded of vegetation must be stabilized so as to inhibit erosion by wind and water.
20. As the engineer/QSD of record, I have selected appropriate BMPs to effectively minimize the negative impacts of this project's construction activities on storm water quality. The project owner and contractor are aware that the selected BMPs must be installed, monitored, and maintained to ensure their effectiveness.

    Civil Engineer/QSD Signature Date
21. The following notes must be on the plan:

    As the project owner or authorized agent of the owner, "I certify that this document and all attachments were prepared under my direction or supervision in accordance with the system designed to ensure that a qualified personnel properly gather and evaluate the information submitted. Based on my inquiry of the person or persons who manage the system or those persons directly responsible for gathering the information, to the best of my knowledge and belief, the information submitted is true, accurate, and complete. I am aware that submitting false and/ or inaccurate information, failing to update the ESCP to reflect current conditions, or failing to properly and/or adequately implement the ESCP may result in revocation of grading and/or other permits or other sanctions provided by law."

    Owner or Authorized Representative (Permittee) Date
22. Developers/contractors are responsible to inspect all Erosion Control Devices and BMPs are installed and functioning properly as required by the State Construction General Permit. A construction site inspection checklist and inspection log shall be maintained at the project site at all times and available for review by the Building Official.
23. The following BMPs from the "CASQA Construction BMP Online Handbook" must be implemented for all construction activities as applicable. As an alternative, details from "Caltrans Stormwater Quality Handbooks, Construction Site Best Management Practices (BMP) Manual" may be used. Additional measures may be required if deemed appropriate by the Building Official.

EROSION CONTROL
EC1 – SCHEDULING
EC2 – PRESERVATION OF EXISTING VEGETATION
EC3 – HYDRAULIC MULCH
EC4 – HYDROSEEDING
EC5 – SOIL BINDERS
EC6 – STRAW MULCH
EC7 – GEOTEXTILES & MATS
EC8 – WOOD MULCHING
EC9 – EARTH DIKES AND DRAINAGE SWALES
EC10 – VELOCITY DISSIPATION DEVICES
EC11 – SLOPE DRAINS
EC12 – STREAMBANK STABILIZATION
EC13 – *RESERVED*
EC14 – COMPOST BLANKETS
EC15 – SOIL PREPARATION/ROUGHENING
EC16 – NON-VEGETATED STABILIZATION

TEMPORARY SEDIMENT CONTROL
SE1 – SILT FENCE
SE2 – SEDIMENT BASIN
SE3 – SEDIMENT TRAP
SE4 – CHECK DAM
SE5 – FIBER ROLLS
SE6 – GRAVEL BAG BERM
SE7 – STREET SWEEPING AND VACUUMING
SE8 – SANDBAG BARRIER
SE9 – STRAW BALE BARRIER
SE10 – STORM DRAIN INLET PROTECTION
SE11 – ACTIVE TREATMENT SYSTEMS
SE12 – TEMPORARY SILT DIKE
SE13 – COMPOST SOCKS & BERMS
SE14 – BIOFILTER BAGS

WIND EROSION CONTROL
WE1 – WIND EROSION CONTROL

TEMPORARY TRACKING CONTROL
TC1 – STABILIZED CONSTRUCTION ENTRANCE EXIT
TC2 – STABILIZED CONSTRUCTION ROADWAY
TC3 – ENTRANCE/OUTLET TIRE WASH

NON-STORMWATER MANAGEMENT
NS1 – WATER CONSERVATION PRACTICES
NS2 – DEWATERING OPERATIONS
NS3 – PAVING AND GRINDING OPERATIONS
NS4 – TEMPORARY STREAM CROSSING
NS5 – CLEAR WATER DIVERSION
NS6 – ILLICIT CONNECTION/DISCHARGE
NS7 – POTABLE WATER/IRRIGATION
NS8 – VEHICLE AND EQUIPMENT CLEANING
NS9 – VEHICLE AND EQUIPMENT FUELING
NS10 – VEHICLE AND EQUIPMENT MAINTENANCE
NS11 – PILE DRIVING OPERATIONS
NS12 – CONCRETE CURING
NS13 – CONCRETE FINISHING
NS14 – MATERIAL AND EQUIPMENT USE
NS15 – DEMOLITION ADJACENT TO WATER
NS16 – TEMPORARY BATCH PLANTS

WASTE MANAGEMENT & MATERIAL POLLUTION CONTROL
WM1 – MATERIAL DELIVERY AND STORAGE
WM2 – MATERIAL USE
WM3 – STOCKPILE MANAGEMENT
WM4 – SPILL PREVENTION AND CONTROL
WM5 – SOLID WASTE MANAGEMENT
WM6 – HAZARDOUS WASTE MANAGEMENT
WM7 – CONTAMINATION SOIL MANAGEMENT
WM8 – CONCRETE WASTE MANAGEMENT
WM9 – SANITARY/SEPTIC WASTE MANAGEMENT
WM10 – LIQUID WASTE MANAGEMENT

CITY OF LONG BEACH BMP NOTICE

AS THE ENGINEER OF RECORD, I HAVE SELECTED THE APPROPRIATE BMPS TO EFFECTIVELY MINIMIZE THE NEGATIVE IMPACTS OF THIS PROJECT'S CONSTRUCTION ACTIVITIES ON STORM WATER QUALITY. THE PROJECT OWNER AND CONTRACTOR ARE AWARE THAT THE SELECTED BMPS MUST BE INSTALLED, MONITORED, AND MAINTAINED TO ENSURE THEIR EFFECTIVENESS. THE BMPS NOT SELECTED FOR IMPLEMENTATION ARE REDUNDANT OR DEEMED NOT APPLICABLE TO THE PROPOSED CONSTRUCTION ACTIVITIES.

NAME POSITION DATE

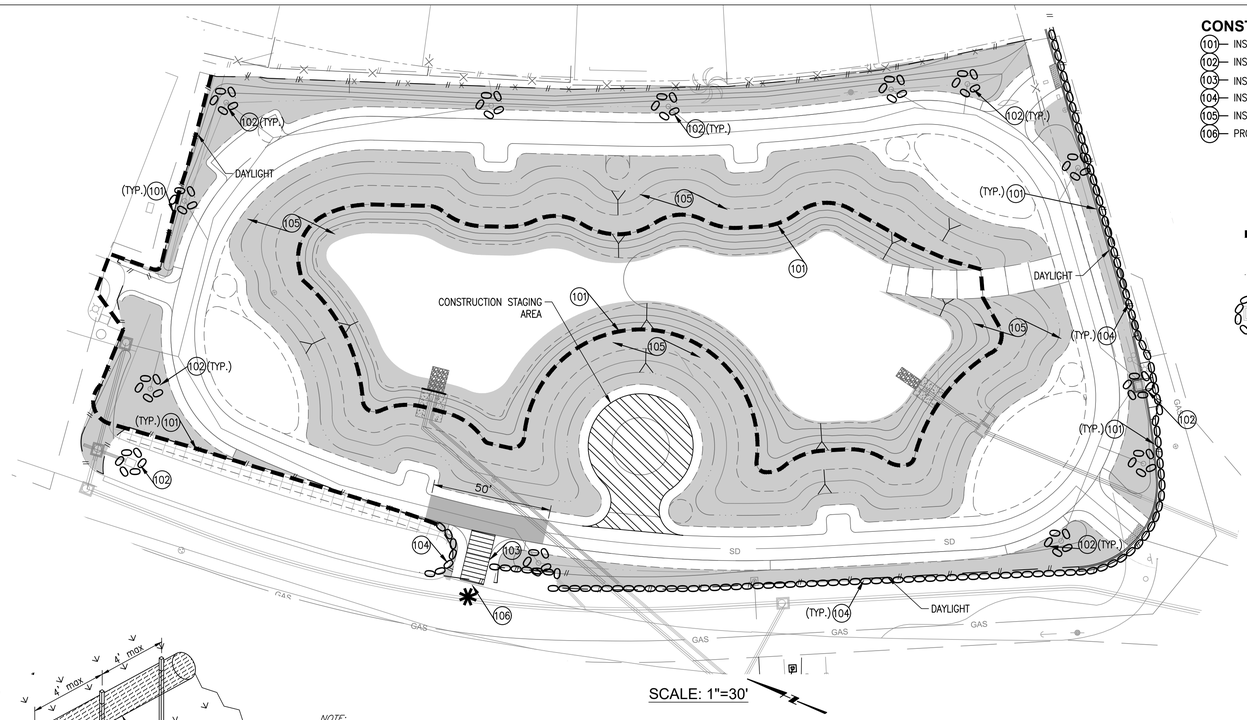

SCALE: 1"=30'

CONSTRUCTION NOTES

101 — INSTALL FIBER ROLL PER DETAIL 1 ON SHEET 9 AND CASQA BMP SE-5
102 — INSTALL MODIFIED INLET PROTECTION PER DETAIL 2 ON SHEET 9 AND CASQA BMP SE-10
103 — INSTALL MODIFIED STABILIZED CONSTRUCTION ENTRANCE/EXIT PER DETAIL 4 ON SHEET 9 AND CASQA BMP
104 — INSTALL GRAVEL BAG BARRIER PER DETAIL 3 ON SHEET 9 AND CASQA BMP SE-6
105 — INSTALL HYDROMULCH PER MANUFACTURERS RECOMMENDATION AND CASQA BMP EC-3
106 — PROVIDE STREET SWEEPING AND VACUUMING PER CASQA BMP SC-7

LEGEND

STORM WATER POLLUTION PREVENTION PLAN
EROSION AND SEDIMENT CONTROL NO.

FIBER ROLL SE-5
GRAVEL BAG BARRIER SE-6
INLET PROTECTION SE-10
STABILIZED CONSTRUCTION ENTRANCE/EXIT TC-1
HYDROMULCH EC-3
CONSTRUCTION ENTRANCE
CONSTRUCTION STAGING AREA

CONSTRUCTION STAGING AREA

NS8 — VEHICLE AND EQUIPMENT CLEANING
NS9 — VEHICLE AND EQUIPMENT FUELING
NS10 — VEHICLE AND EQUIPMENT MAINTENANCE
WM1 — MATERIAL DELIVERY AND STORAGE
WM2 — MATERIAL USE
WM3 — STOCKPILE MANAGEMENT
WM4 — SPILL PREVENTION AND CONTROL
WM5 — SOLID WASTE MANAGEMENT
WM6 — HAZARDOUS WASTE MANAGEMENT
WM7 — CONTAMINATED SOIL MANAGEMENT
WM8 — CONCRETE WASTE MANAGEMENT – ONCRETE WASHOUT AREA
WM9 — SANITARY SEPTIC WASTE MANAGEMENT
WM10 — LIQUID WASTE MANAGEMENT

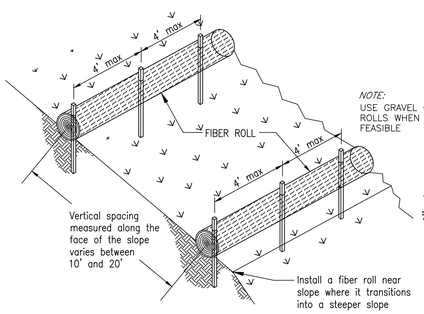

TYPICAL FIBER ROLL INSTALLATION

NOTE:
USE GRAVEL CORE FIBER ROLLS WHEN STAKING IS NOT FEASIBLE

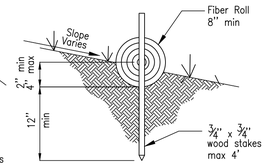

FIBER ROLL SECTION

FIBER ROLLS (1)
NOT TO SCALE (BMP SE-5)

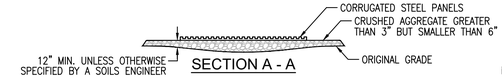

SECTION A - A

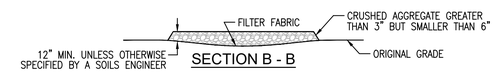

SECTION B - B

NOTES:
1. THE ENTRANCE SHALL BE MAINTAINED IN A CONDITION THAT WILL PREVENT TRACKING OR FLOWING OF SEDIMENT ONTO PUBLIC RIGHT-OF-WAYS. THIS MAY REQUIRE TOP DRESSING, REPAIR AND/OR CLEANOUT OF ANY MEASURES USED TO TRAP SEDIMENT.
2. WHEN NECESSARY, WHEELS SHALL BE CLEANED PRIOR TO ENTRANCE ONTO PUBLIC RIGHT-OF-WAY.
3. WHEN WASHING IS REQUIRED, IT SHALL BE DONE ON AN AREA STABILIZED WITH CRUSHED STONE THAT DRAINS INTO AN APPROVED SEDIMENT TRAP OR SEDIMENT BASIN.

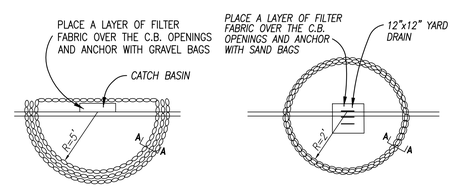

SECTION A-A

MODIFIED INLET PROTECTION (2)
NOT TO SCALE (BMP SE-10)

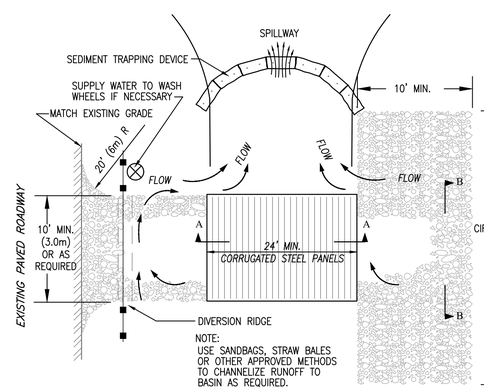

PLAN

MODIFIED STABILIZED CONSTRUCTION ENTRANCE/EXIT (4)
NOT TO SCALE (BMP TC-1)

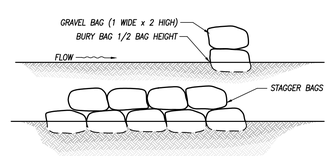

GRAVEL BAG BARRIER (1 WIDE x 2 HIGH) (3)
NOT TO SCALE (BMP SE-6)

NOTICE TO CONTRACTOR:

1. CONTRACTOR TO VERIFY HORIZONTAL AND VERTICAL LOCATIONS OF EXISTING UTILITIES PRIOR TO COMMENCEMENT OF WORK OR ORDERING OF MATERIALS.
2. REMOVE ALL EXISTING GRAVEL BAGS AND VISQUEEN, IF ANY.
3. IF EXISTING BMP ON SITE IS THE SAME AS BMP CALLED OUT ON THIS PLAN, REPLACE THE BMP'S WITH NEW MATERIALS.
4. REPAIR ALL SLOPES EXHIBITING EROSION (I.E. RILLS) BY RE-GRADING, TRACK-WALKING, OR DISCING.
5. CONSTRUCTION STAGING AREA: ACTUAL LOCATION TO BE DETERMINED BY CONTRACTOR IN THE FIELD – LOCATION MAY VARY.
6. CONSTRUCTION WORKER PARKING AREA: ACTUAL LOCATION TO BE DETERMINED BY CONTRACTOR IN THE FIELD – LOCATION MAY VARY
7. CONTRACTOR SHALL MOVE BMPS FOR ACCESS AND REPLACE WHEN WORK IN AN AREA IS COMPLETED

REVISIONS

No.	DATE	SHEET	APPROVAL	DESCRIPTION

DESIGNED BY:
DRAWN BY:
DESIGN CHECK BY:
DRAFTING CHECK BY:
AS-BUILT:
REF.

REGISTERED PROFESSIONAL ENGINEER ROGER T. CHUNG No. C65388 CIVIL STATE OF CALIFORNIA

Long Beach Municipal Urban Stormwater Treatment (MUST)
Phase 1C - Wetlands - 903 Fairbanks Ave
EROSION CONTROL PLAN

PAGE
FIELD BOOK
GRAPHIC SCALE

JOB NO. X
NO. R-
SHEET 9 OF 28
DRAWING NO. C-9

Stantec
Stantec Consulting Ltd.
38 Technology Drive
Irvine, Ca.
92618-5312
Tel. 949.923.6000
Fax. 949.923.6121
www.stantec.com

LAST SAVED BY: ejwalker
PLOT DATE: Nov. 4, 20 SAVED PATH: C:\pwworkdir\d0489025

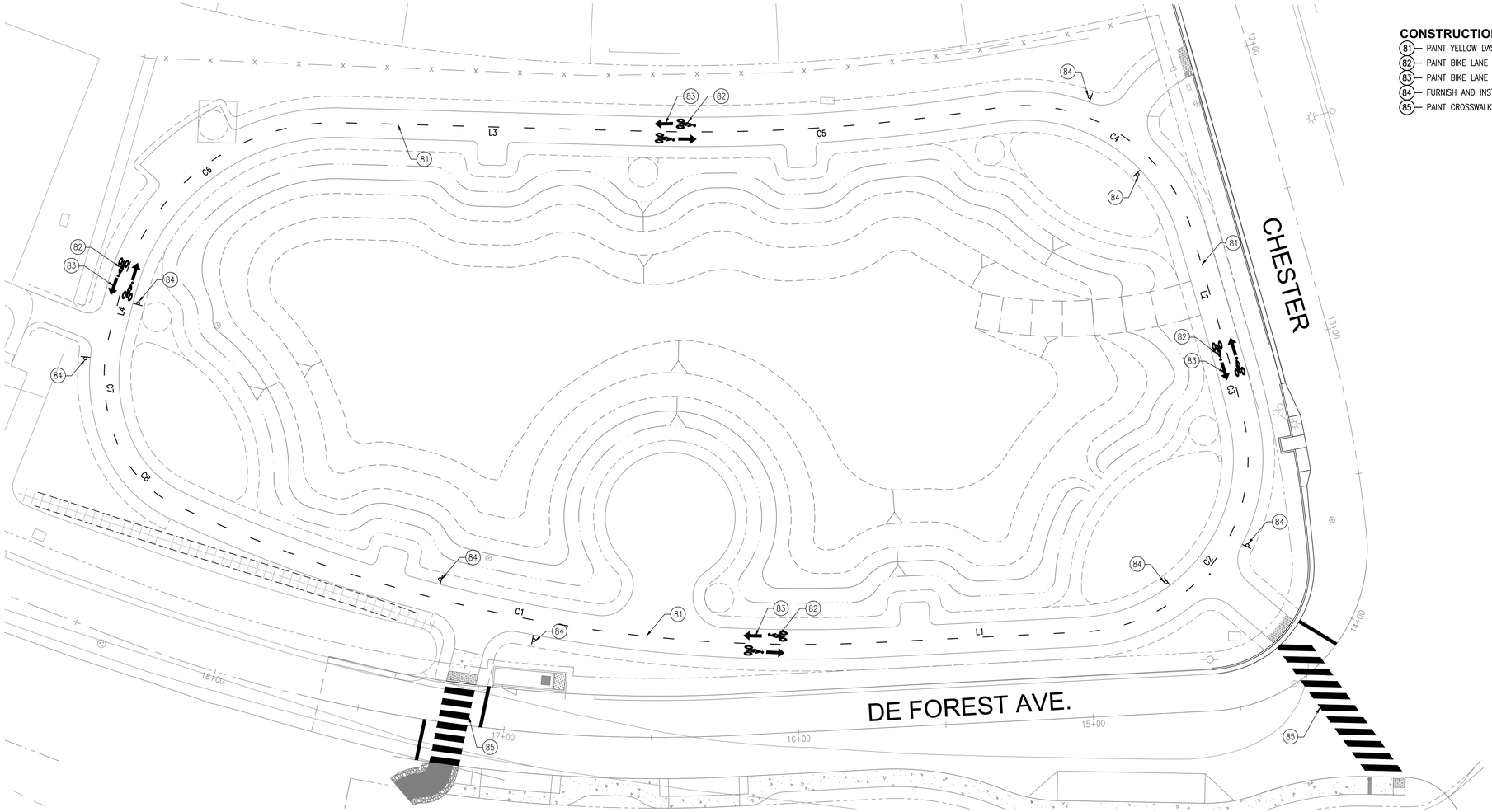

CONSTRUCTION NOTES

(81)— PAINT YELLOW DASHED CENTERLINE PER 2018 CALTRANS STANDARD PLAN A20A DETAIL 1
(82)— PAINT BIKE LANE SYMBOL PER CALTRANS STANDARD PLAN A24C
(83)— PAINT BIKE LANE ARROW SYMBOL PER CALTRANS STANDARD PLAN A24A
(84)— FURNISH AND INSTALL SIGN W11-15 PER 2009 MUTCD
(85)— PAINT CROSSWALK PER CITY OF LONG BEACH STD. 307.

SIGN LEGEND

MUTCD W11-15

LINE TABLE		
LINE #	LENGTH	DIRECTION
L1	70.06	S27°13'54"E
L2	43.94	N49°38'12"E
L3	102.40	N22°41'53"W
L4	15.88	S80°36'25"W

CURVE TABLE				
CURVE #	LENGTH	RADIUS	DELTA	TANGENT
C1	244.12'	499.00'	28°01'49"	124.55'
C2	102.28'	59.00'	99°19'46"	69.48'
C3	22.84'	365.00'	3°35'07"	11.42'
C4	85.59'	59.00'	83°07'21"	52.31'
C5	119.93'	637.00'	10°47'16"	60.15'
C6	100.39'	75.00'	76°41'42"	59.33'
C7	38.90'	59.00'	37°46'37"	20.19'
C8	29.34'	40.00'	42°01'52"	15.37'

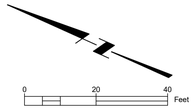

Stantec
Stantec Consulting Ltd.
38 Technology Drive
Irvine, Ca.
92618-5312
Tel. 949.923.6000
Fax. 949.923.6121
www.stantec.com

REVISIONS

No.	DATE	SHEET	APPROVAL	DESCRIPTION

DESIGNED BY:
DRAWN BY:
DESIGN CHECK BY:
DRAFTING CHECK BY:
AS-BUILT:
REF.

REGISTERED PROFESSIONAL ENGINEER ROGER T. CHUNG No. C65388 CIVIL STATE OF CALIFORNIA

Long Beach Municipal Urban Stormwater Treatment (MUST)
Phase 1C - Wetlands - 903 Fairbanks Ave
SIGNING AND STRIPING PLAN

GRAPHIC SCALE
PAGE
FIELD BOOK

JOB NO. X
NO. R-
SHEET 10 OF 28
DRAWING NO. C-10

LAST SAVED BY: ejwalker
PLOT DATE: Nov. 4, 20 SAVED PATH: C:\pwworkdir\d0489025

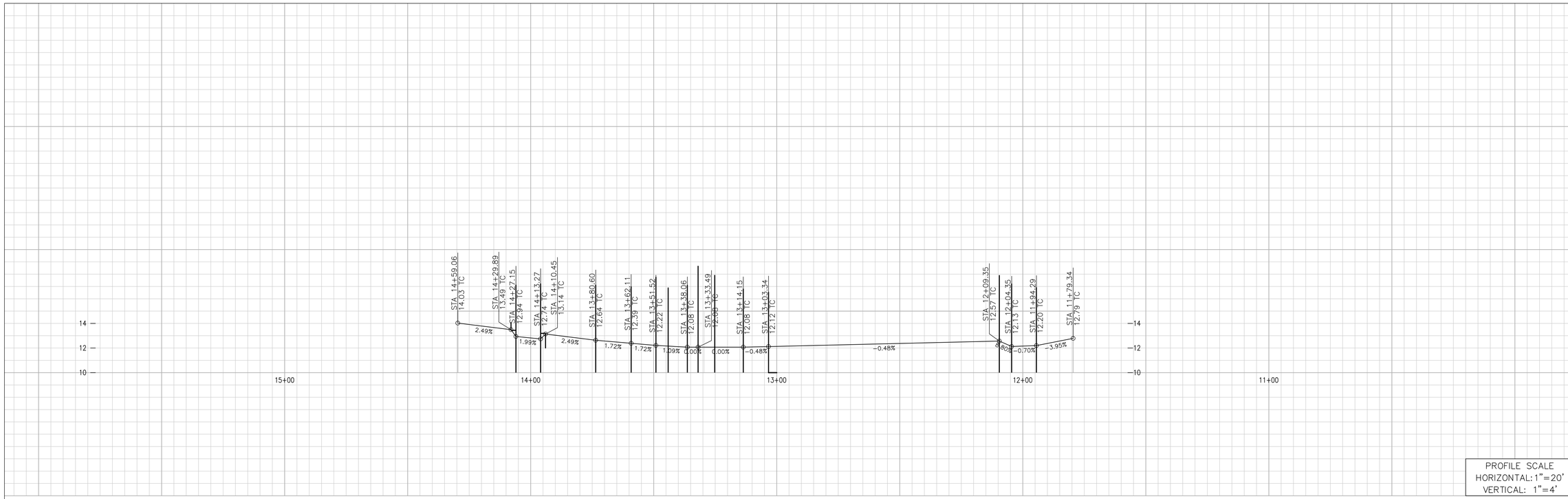

PROFILE SCALE
HORIZONTAL: 1"=20'
VERTICAL: 1"=4'

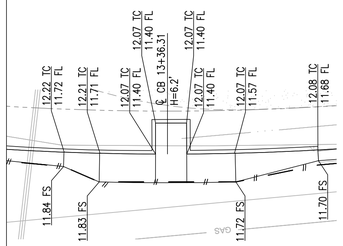

LOCAL DEPRESSION DETAIL
CB #1
NOT TO SCALE

PROPOSED TREATMENT FACILITY

WETLANDS

DE FOREST AVENUE

FUTURE ROW

14.50'

14+59.06 ECR
(14.03) TC
(13.66) FL

(13.00) FS
(13.00) FS
BCR

2.60%

14+27.15
12.94 FL
12.94 TC
14+13.27
12.74 TC
12.74 FL

13+80.60
12.64 TC

13+79.59
12.39 TC

℄ CB #1
13+36.31
H=6.2'

13+38.06 BC
12.08 TC

13+33.49 BC
12.08 TC

12+09.39 BC
12.20 TC

10.0'

20.00'

CHESTER PLACE

12+14.35
12.57 TC
12.07 FL
12+04.35
12.13 TC
12.13 FL

11+94.29
12.20 TC
12.20 FL

11+79.34
(12.79) TC
JOIN EX. CURB

13+00
12+00
11+73

CHESTER PLACE

LEGEND

- STREET IMPROVEMENT LIMIT OF WORK
- FUTURE ROW
- GRADING DAYLIGHT
- CURB OR CURB AND GUTTER
- COLORED CONCRETE
- PEA GRAVEL
- CONCRETE PAVEMENT (VEHICULAR)
- CONCRETE
- TRUNCATED DOMES
- CATCH BASIN

CONSTRUCTION NOTES

(33)— CONSTRUCT 6" ROLLED CURB AND GUTTER PER DETAIL 13 ON SHEET 15
(34)— CONSTRUCT CURB TRANSITION PER DETAIL 15 ON SHEET 15.
(45)— STANDARD CURB TERMINATION PER DETAIL 8 ON SHEET 15
(46)— ROLLED CURB TERMINATION PER DETAIL 9 ON SHEET 15
(47)— CONSTRUCT LOCAL DEPRESSION PER SPPWD STD. 313-3, CASE B.

LINE TABLE		
LINE No.	LENGTH	DIRECTION
L5	120.05	S49°51'13"W
L6	4.34	S55°03'56"W

CURVE TABLE				
CURVE #	RADIUS	LENGTH	DELTA	TANGENT
C6	35.00	56.054	91°46'01"	36.09
C5	380.00	14.489	2°11'05"	7.25
C3	380.00	22.755	3°25'52"	11.38
C2	380.00	32.398	4°53'05"	16.21

0 20 40 Feet

CHESTER PLACE

Stantec
Stantec Consulting Ltd.
38 Technology Drive
Irvine, Ca.
92618-5312
Tel. 949.923.6000
Fax. 949.923.6121
www.stantec.com

REVISIONS				
No.	DATE	SHEET	APPROVAL	DESCRIPTION
AS-BUILT:				REF.

DESIGNED BY:
DRAWN BY:
DESIGN CHECK BY:
DRAFTING CHECK BY:

REGISTERED PROFESSIONAL ENGINEER
ROGER T. CHUNG
No. C65388
CIVIL
STATE OF CALIFORNIA

Long Beach Municipal Urban Stormwater Treatment (MUST)
Phase 1C - Wetlands - 903 Fairbanks Ave
STREET IMPROVEMENT PLAN

GRAPHIC SCALE
PAGE
FIELD BOOK

JOB NO. X
NO. R-
SHEET 11 OF 28
DRAWING NO. C-11

LAST SAVED BY: ejwalker
PLOT DATE: Nov. 5, 20 SAVED PATH: C:\pwworkdir\d0489025

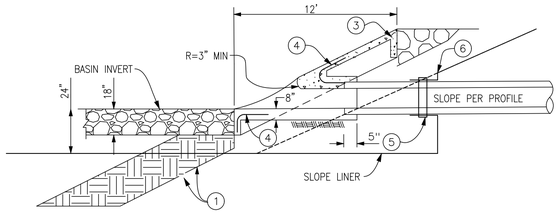

ROCK LINED CHANNEL CONDITION

NTS

NOTES:

1. CUTOFF WALLS SHALL BE PROVIDED AROUND THE ENTIRE PERIMETER OF THE SIDE SLOPE CONCRETE. CUTOFF WALL DEPTH IS 18 INCHES.
2. ROCK ENERGY DISSIPATER SHALL BE 1.25' THICK BACKING NUMBER 2 PER DETAIL 2 ON SHEET 10.
3. SEE DETAIL B.
4. 4-#4X2' TIES SPACED EQUALLY, TYP.
5. CUT OPENING IN IMPERMEABLE LINER, FURNISH, INSTALL, AND TEST PIPE BOOT PENETRATION INCLUDING PIPE BOOT, RUBBER GASKETS, STAINLESS STEEL BANDING, AND EXTRUSION WELDED SEAMS
6. NOTCH ROUGH GRADE SLOPE FOR PIPE ENTRANCE AND USE PIPE BOOT

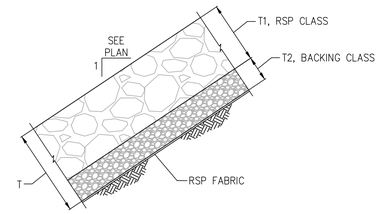

ROCK SLOPE PROTECTION SCHEDULE						
RSP CLASS	METHOD	T1	BACKING	T2	T	RSP FABRIC
BACKING 2	B	1.25	N/A	N/A	1.25	8

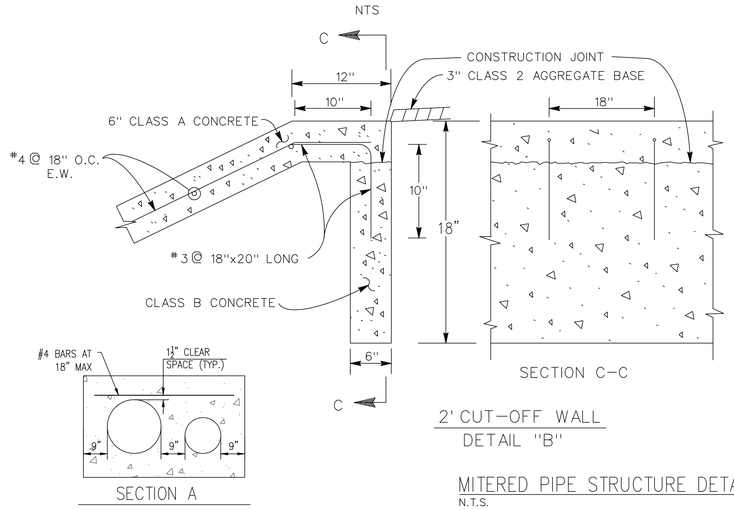

SECTION C-C

2' CUT-OFF WALL

DETAIL "B"

SECTION A

MITERED PIPE STRUCTURE DETAIL 1

N.T.S.

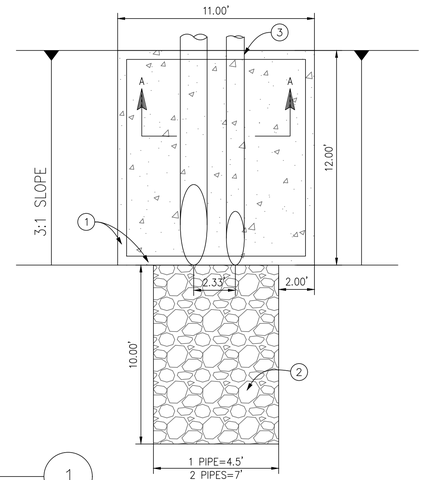

RIPRAP NOTES:

1. ROCKS FOR RIPRAP AND GROUTED RIPRAP SHALL MEET THE QUALITY REQUIREMENTS OF CALTRANS STANDARD SPECIFICATION SECTION 72-2 AND 72-3, RESPECTIVELY. ROCKS, WHEN CONFORMING TO SECTION 72-2.02 OR 72-3.02, MAY BE OBTAINED FROM ROCK EXCAVATION OR OTHER EXCAVATION BEING PERFORMED ON SITE.
2. ALL ROCKS SHALL BE PLACED IN ACCORDANCE WITH METHOD B PLACEMENT CRITERIA OF THE CALTRANS STANDARD SPECIFICATIONS SECTION 72-2.03 OR 72-3.03 EXCEPT 1TON ROCKS, WHICH SHALL BE PLACED IN ACCORDANCE WITH METHOD A.
3. GROUTED RIPRAP WHERE OCCURS SHALL BE GROUTED USING CLASS 3 CONCRETE OR MINOR CONCRETE CONFORMING TO THE PROVISIONS IN SECTION 90. THE WATER CONTENT OF THE CONCRETE SHALL BE SUCH AS TO PERMIT GRAVITY FLOW INTO THE INTERSTICES WITH LIMITED SPADING AND BROOMING.
4. PLACING CONCRETE FOR GROUTED RIPRAP WHERE OCCURS INCLUDING CLEANING ROCKS PRIOR TO PLACEMENT, DEPOSITING EQUIPMENT, ROCK PROJECTION, AND CURING TIME SHALL CONFORM TO SECTION 72-3.03.
5. OUTER ROCKS OF GROUTED RIPRAP SHALL PROJECT 1/3 TO 1/4 THEIR DIAMETER ABOVE THE CONCRETE SURFACE.

TYPICAL RIPRAP SECTION 2

N.T.S.

DROP INLET

36"x36" I.D.
(NOMINAL DIMENSIONS)
WITH FRAME AND GRATE

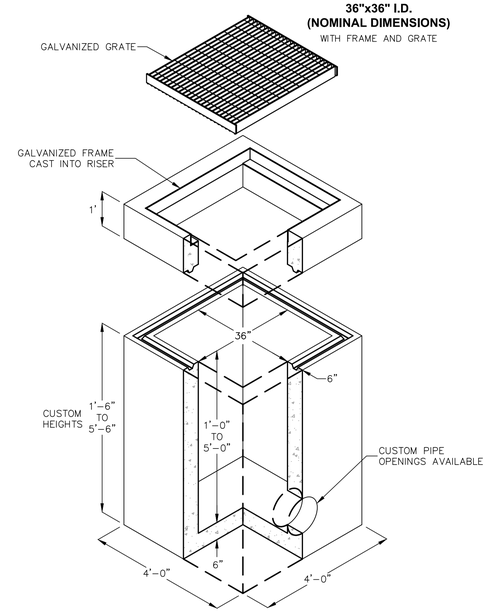

FOR COMPLETE DESIGN AND PRODUCT INFORMATION CONTACT JENSEN PRECAST.

2/1/08
D136x36_3636FG_FF_A.dwg
© 2008 Jensen Precast

JENSEN PRECAST

JENSEN PRECAST INLET 3

N.T.S.

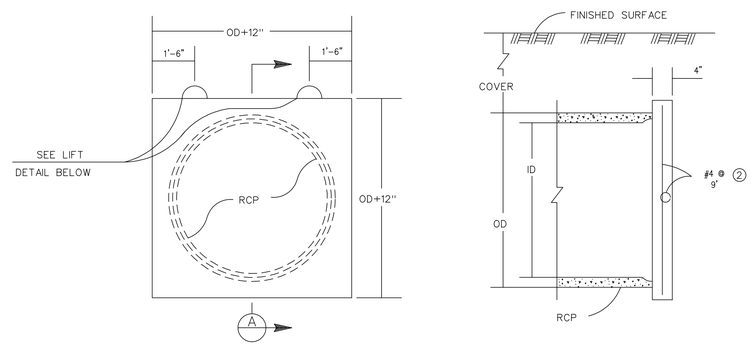

FRONT VIEW

SECTION A

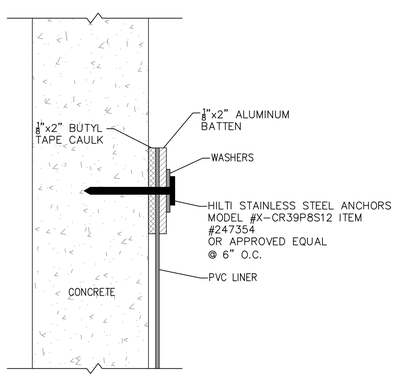

PVC LINER CONNECTION DETAIL 4

N.T.S.

NOTES

1. CONCRETE SHALL BE CLASS 'A'.
2. ALL REINFORCING STEEL SHALL BE CENTERED IN BULKHEAD EXCEPT FOR PIPE DIAMETER GREATER THAN 96", VERTICAL "A" BARS SHALL BE PLACED AT 2" CLEAR FROM THE INSIDE FACE OF THE BULKHEAD. HORIZONTAL "A" BARS SHALL BE PLACED TOWARDS OUTSIDE FACE OF BULKHEAD PER DETAIL.
3. LIFTS SHALL BE WOVEN STEEL CABLE WITH SAME MINIMUM DIAMETER (d) AS "A" BARS. WEAVE CABLE THROUGH HORIZONTAL "A" BARS. COAT EXPOSED PORTION OF CABLE LIFTS WITH AN APPROVED BITUMINOUS PAINT PRIOR TO BACKFILLING TRENCH.

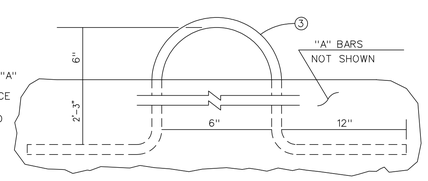

LIFT DETAIL

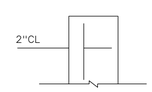

DETAIL

CONCRETE BULKHEAD 5

N.T.S.

REVISIONS				
No.	DATE	SHEET	APPROVAL	DESCRIPTION
AS-BUILT:				REF.

DESIGNED BY:
DRAWN BY:
DESIGN CHECK BY:
DRAFTING CHECK BY:

REGISTERED PROFESSIONAL ENGINEER ROGER T. CHUNG No. C65388 CIVIL STATE OF CALIFORNIA

Long Beach Municipal Urban Stormwater Treatment (MUST)
Phase 1C - Wetlands - 903 Fairbanks Ave

DETAILS 1

GRAPHIC SCALE
PAGE
FIELD BOOK

JOB NO. X
NO. R-
SHEET 12 OF 28
DRAWING NO. C-12

Stantec
Stantec Consulting Ltd.
38 Technology Drive
Irvine, Ca.
92618-5312
Tel. 949.923.6000
Fax. 949.923.6121
www.stantec.com

LAST SAVED BY: ejwalker
PLOT DATE: Nov. 4, 20 SAVED PATH: C:\pwworkdir\d0489025

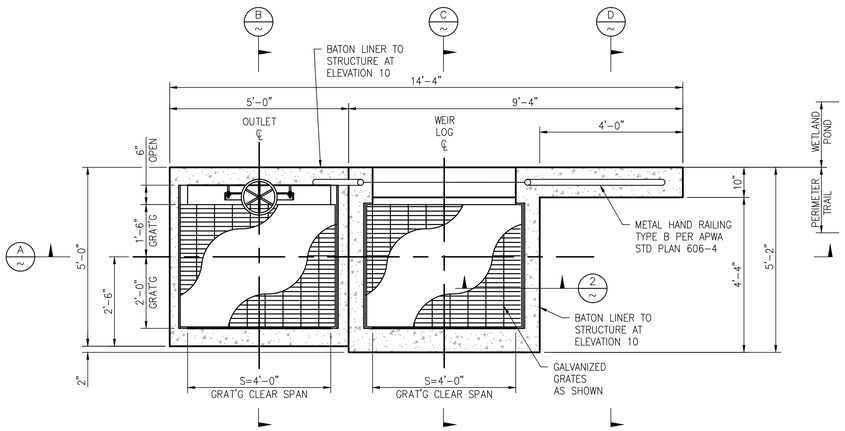

PLAN DETAIL -
WETLAND POND OUTLET STRUCTURE (6)
N.T.S.

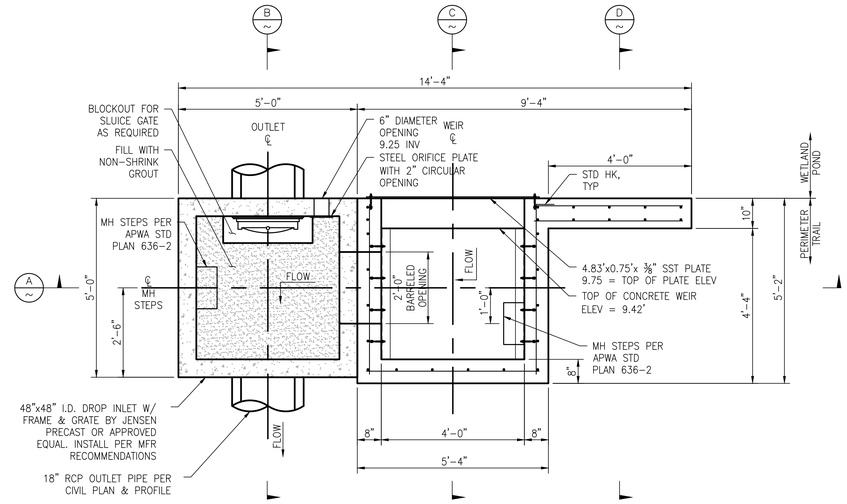

PLAN SECTION DETAIL -
WETLAND POND OUTLET STRUCTURE (E)
N.T.S.

OUTLET PHASING INSTRUCTIONS			
PHASE	FLOW (CFS)	POND WSEL	INSTRUCTIONS
32.7 GPM	0.07	9.75	
2 MGD	3.10	10.12	REMOVE 2" ORIFICE PLATE WHEN PLANT PRODUCES 2 MGD
2 MGD + 50 YR STORM	8.73	10.57	
4 MGD	6.20	10.06	REMOVE 4" WEIR PLATE WHEN PLANT PRODUCES 4 MGD
4 MGD + 50 YR STORM	11.83	10.45	

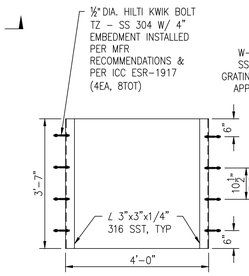

FRAME PLAN
N.T.S.

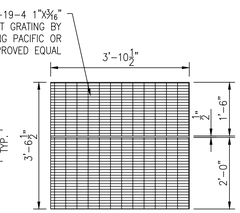

GRATING PLAN
N.T.S.

NOTE:
OUTLET STRUCTURE SHALL BE:
F'C = 4500 PSI (658-CME-4500P)
PER GREENBOOK SECTION 201-1.1.3
W/ FY = 60 KSI (GRADE 60 PER ASTM A615)

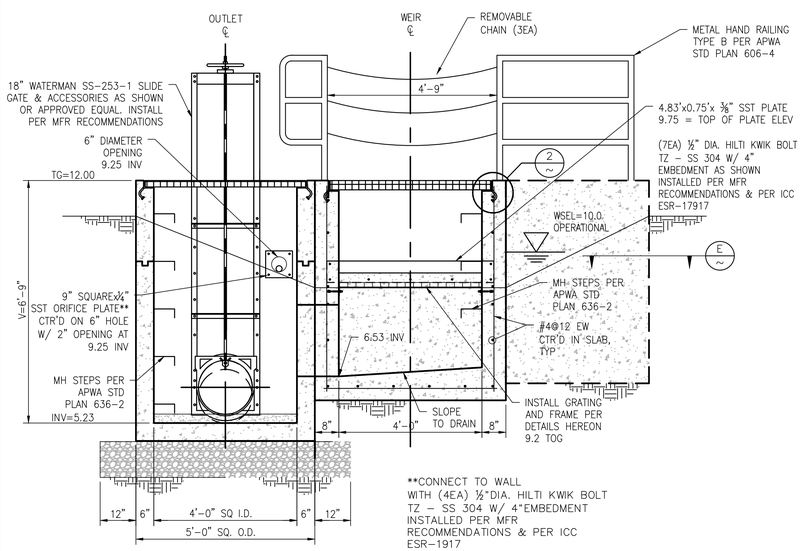

SECTION DETAIL -
WETLAND POND OUTLET STRUCTURE (A)
N.T.S.

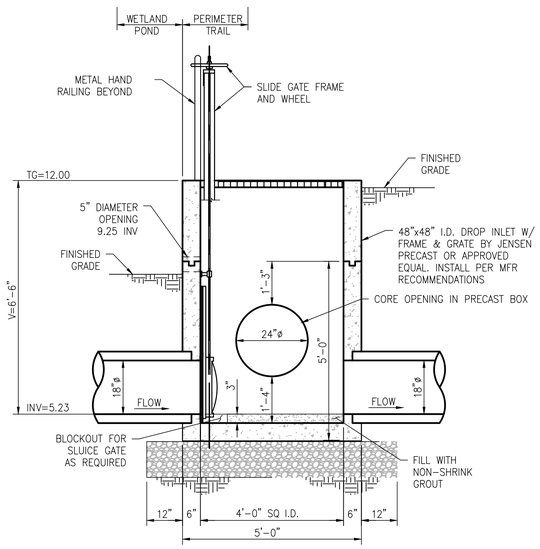

SECTION DETAIL -
PRECAST OUTLET STRUCTURE (B)
N.T.S.

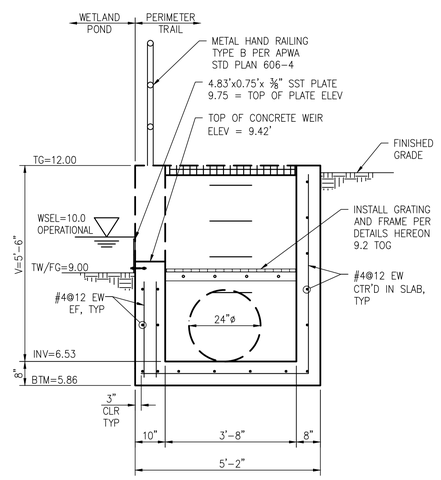

SECTION DETAIL -
CIP OVERFLOW STRUCTURE (C)
N.T.S.

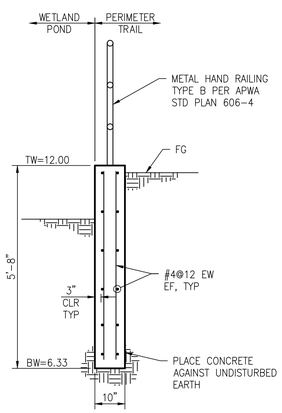

SECTION DETAIL - CIP WINGWALL (D)
N.T.S.

No.	DATE	SHEET	APPROVAL	DESCRIPTION

REVISIONS

REF.

AS-BUILT:

DESIGNED BY:
DRAWN BY:
DESIGN CHECK BY:
DRAFTING CHECK BY:

REGISTERED PROFESSIONAL ENGINEER
ROGER T. CHUNG
No. C65388
CIVIL
STATE OF CALIFORNIA

Long Beach Municipal Urban Stormwater Treatment (MUST)
Phase 1C - Wetlands - 903 Fairbanks Ave
DETAILS 2

GRAPHIC SCALE
PAGE
FIELD BOOK

JOB NO. X
NO. R-
SHEET 13 OF 28
DRAWING NO. C-13

Stantec
Stantec Consulting Ltd.
38 Technology Drive
Irvine, Ca.
92618-5312
Tel. 949.923.6000
Fax. 949.923.6121
www.stantec.com

LAST SAVED BY: ejwalker
PLOT DATE: Nov. 4, 20 SAVED PATH: C:\pwworkdir\d0489025

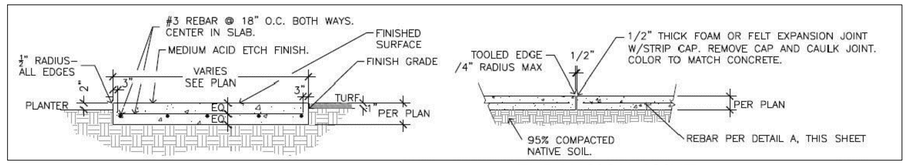

CONCRETE WALK

EXPANSION JOINT

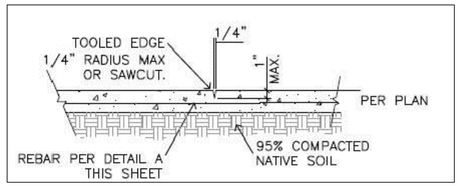

CONTROL JOINT

NOTE: ALTERNATE CONTROL AND EXPANSION JOINTS AT 12' O/C ALONG CONSTRUCTION OF WALK.

PEDESTRIAN CONCRETE PAVEMENT (7)

NOT TO SCALE

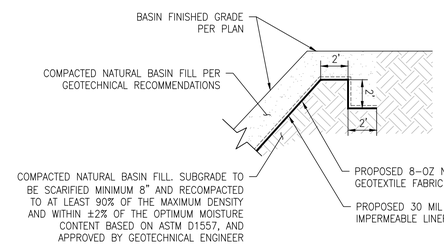

TOP OF LINER ANCHOR DETAIL (11)

NOT TO SCALE

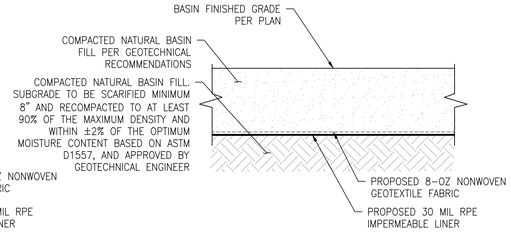

LINER AND FABRIC INSTALLATION DETAIL (12)

NOT TO SCALE

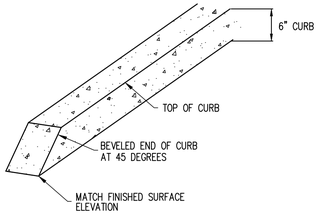

STANDARD CURB TERMINATION (8)

NOT TO SCALE

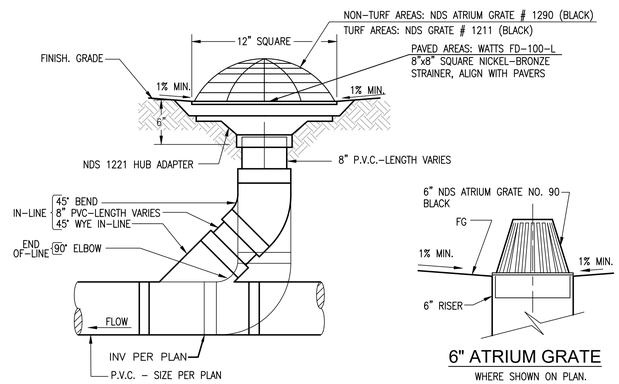

6" ATRIUM GRATE

WHERE SHOWN ON PLAN.

GRATE WITH RISER DETAIL (10)

NOT TO SCALE

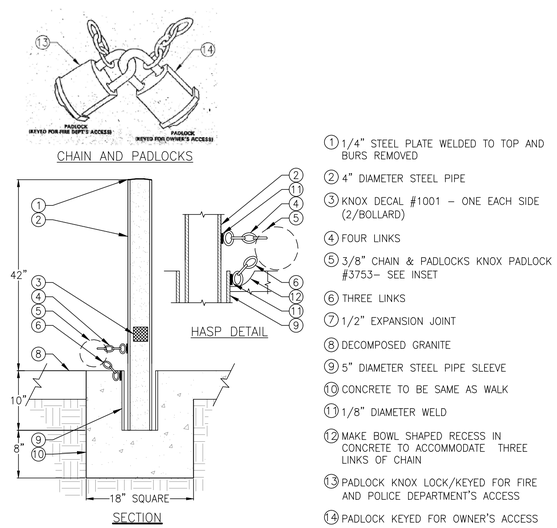

NOTES:
1. CHAIN TO BE 1/4" PROOF COIL CHAIN GALVANIZED STEEL. WELD FOUR LINKS TO PIPE SLEEVE.
2. ALL METAL TO BE HOT-DIP GALVANIZED AFTER FABRICATION.
3. PROVIDE KNOX LOCK BOX AND CHAIN.

DEMOUNTABLE BOLLARD WITH KNOX LOCK DETAIL (14)

NOT TO SCALE

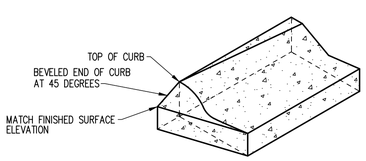

ROLLED CURB TERMINATION (9)

NOT TO SCALE

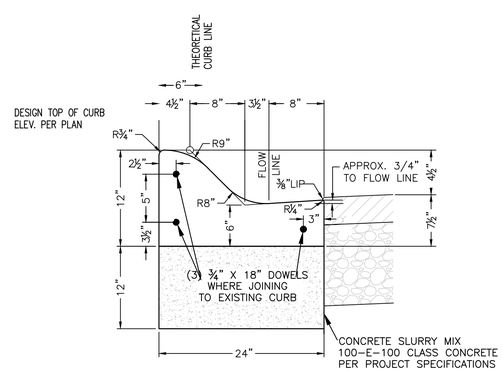

NOTE: DOUBLE SAW-CUT AT 20.00' INTERVALS, SINGLE SAW-CUT AT 10.00' INTERVALS

6" ROLLED CURB AND GUTTER (13)

NOT TO SCALE

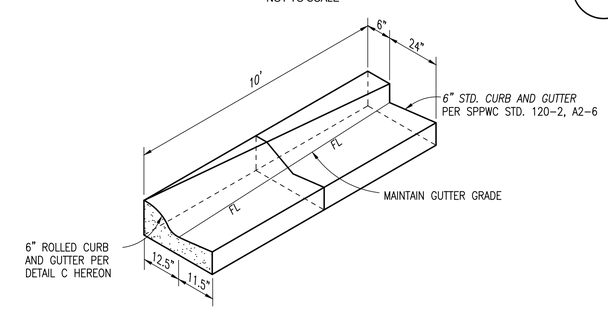

TRANSITION 6" ROLLED CURB AND GUTTER TO 6" STANDARD CURB AND GUTTER (15)

NOT TO SCALE

Stantec

Stantec Consulting Ltd.
38 Technology Drive
Irvine, Ca.
92618-5312
Tel. 949.923.6000
Fax. 949.923.6121
www.stantec.com

REVISIONS

No.	DATE	SHEET	APPROVAL	DESCRIPTION

AS-BUILT: REF.

DESIGNED BY:
DRAWN BY:
DESIGN CHECK BY:
DRAFTING CHECK BY:

REGISTERED PROFESSIONAL ENGINEER ROGER T. CHUNG No. C65388 CIVIL STATE OF CALIFORNIA

Long Beach Municipal Urban Stormwater Treatment (MUST)
Phase 1C - Wetlands - 903 Fairbanks Ave

DETAILS 3

GRAPHIC SCALE
PAGE
FIELD BOOK

JOB NO. X
NO. R-
SHEET 14 OF 28
DRAWING NO. C-14

LAST SAVED BY: ejwalker
PLOT DATE: Nov. 4, 20 SAVED PATH: C:\pwworkdir\d0489025

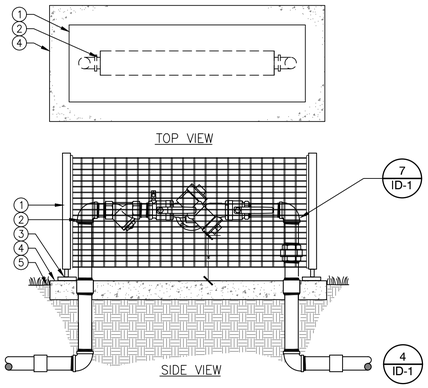

1. "STRONG BOX" SMOOTH TOUCH VANDAL RESISTANT STAINLESS STEEL BACKFLOW PREVENTER ASSEMBLY ENCLOSURE. MODEL PER PLAN OR SCHEDULE. INSTALL PER MANUFACTURER'S RECOMMENDATIONS.
2. BACKFLOW PREVENTER
3. ANCHOR ROD (TYPICAL)
4. POURED CONCRETE BASE– 4" MIN. THICKNESS – EXTEND 4" BEYOND OUTSIDE DIMENSIONS OF ENCLOSURE.
5. FINISH GRADE

NOTES:
1. STAKE OUT BACKFLOW PREVENTER LOCATIONS FOR REVIEW AND APPROVAL BY OWNER. FINAL LOCATION AND EXACT POSITIONING OF THE BACKFLOW PREVENTER SHALL BE APPROVED BY THE OWNER'S AUTHORIZED REPRESENTATIVES PRIOR TO INSTALLATION. FAILURE TO OBTAIN APPROVAL MAY RESULT IN RELOCATION OF BACKFLOW PREVENTER PER OWNER'S DIRECTION AT NO ADDITIONAL COST TO OWNER.
2. INSTALL BACKFLOW PREVENTER AS REQUIRED BY LOCAL CODES AND HEALTH DEPARTMENT. VERIFY LOCAL REQUIREMENTS PRIOR TO INSTALLATION.

8 BACKFLOW ENCLOSURE

SCALE:NTS

328409.46–08

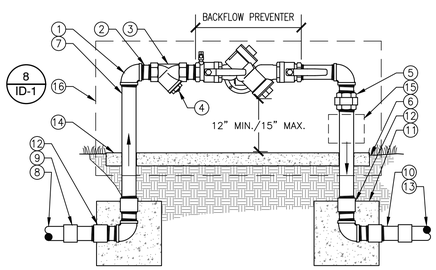

1. BRASS 90 DEGREE ELL (TYPICAL)
2. BRASS NIPPLE–4" MIN. LENGTH (TYPICAL)
3. BRASS WYE STRAINER – IF SPECIFIED, W/60 MESH STAINLESS STEEL SCREEN
4. BRASS PLUG
5. BRASS UNION
6. FINISH GRADE
7. BRASS NIPPLE (TYPICAL)
8. FROM POINT OF CONNECTION. ADAPT AS REQUIRED.
9. PVC SxS COUPLING (TYPICAL)
10. SCHEDULE 80 TOE NIPPLE (TYPICAL)
11. 2 @ 12" x 12" x 12" CONCRETE THRUST BLOCK
12. BRASS COUPLING SET FLUSH W/CONCRETE (TYPICAL)
13. PVC MAINLINE
14. CONCRETE PAVEMENT – 4" THICK. EXTEND 4" BEYOND OUTSIDE DIAMETER OF EACH RISER PIPE OR ENCLOSURE (IF SPECIFIED). FINISH TO MATCH ADJACENT IF ADJACENT TO EXISTING PAVEMENT.
15. PRESSURE REGULATOR – IF SPECIFIED TO BE ATTACHED TO THE BACKFLOW PREVENTER COMPONENTS.
16. BACKFLOW ENCLOSURE IF SPECIFIED.

NOTES:
1. STAKE OUT BACKFLOW PREVENTER LOCATIONS FOR REVIEW AND APPROVAL BY OWNER. FINAL LOCATION AND EXACT POSITIONING OF THE BACKFLOW PREVENTER SHALL BE APPROVED BY THE OWNER'S AUTHORIZED REPRESENTATIVES PRIOR TO INSTALLATION. FAILURE TO OBTAIN APPROVAL MAY RESULT IN RELOCATION OF BACKFLOW PREVENTER PER OWNER'S DIRECTION AT NO ADDITIONAL COST TO OWNER.
2. INSTALL BACKFLOW PREVENTER AS REQUIRED BY LOCAL CODES AND HEALTH DEPARTMENT. VERIFY LOCAL REQUIREMENTS PRIOR TO INSTALLATION.
3. INSTALL CONCRETE PAD AND BELOW GRADE PIPING PER BACKFLOW PREVENTER ENCLOSURE DETAIL IF ENCLOSURE IS REQUIRED.

7 BACKFLOW PREVENTER (2" & SMALLER) ON PAVEMENT

SCALE:NTS

328409.46–07

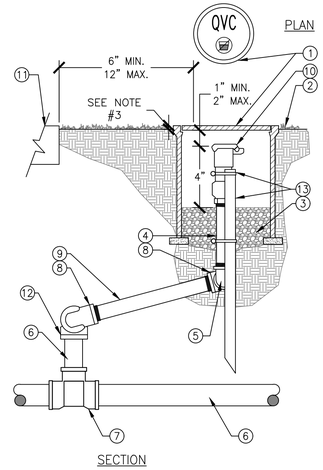

1. 10" ROUND VALVE BOX WITH BLACK BOLT– DOWN COVER – HEAT BRAND "QCV" ON VALVE BOX COVER IN 2" HIGH LETTERS.
2. FINISH GRADE.
3. 3/4" CRUSHED ROCK. 6" MINIMUM DEPTH.
4. BRASS NIPPLE. (LENGTH AS REQUIRED)
5. BRASS 90 DEGREE ELL
6. MAINLINE PIPING
7. MAINLINE FITTING
8. BRASS 90 DEGREE STREET ELL
9. BRASS NIPPLE – 6" LONG
10. QUICK COUPLING VAVLE
11. WALK OR CURB
12. PVC SxT SCHEDULE 40 90° ELBOW
13. STEEL ANGLE STAKE. SECURE W/ (2) STAINLESS STEEL HOSE CLAMPS

NOTE:
1. ALL VALVE BOXES USED IN CONJUNCTION WITH IRRIGATION SYSTEMS CARRYING RECYCLED WATER AREA SHALL BE PURPLE IN COLOR. AND SHALL INCLUDE THE WORDS "RECYCLED WATER – DO NOT DRINK" AND SHALL HAVE THE INTERNATIONAL SYMBOL CONVEYING THE SAME WARNING.
2. DO NOT OVER TIGHTEN BRASS NIPPLE INTO QUICK COUPLING VALVE. USE TEFLON TAPE ON ALL MALE PIPE THREADS. CHECK FOR LEAKS.
3. 1" IN TURF AREAS, 2" IN SHRUB AREAS.

6 QUICK COUPLING VALVE - IN BOX

SCALE:NTS

328406.43–01

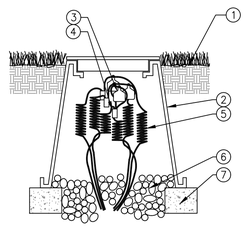

1. FINISHED GRADE SET TOP AT 2" ABOVE FINISHED GRADE IN PLANTED AREAS, 1" ABOVE IN LAWN AREAS
2. PLASTIC 7" ROUND VALVE BOX FOR LESS THAN 8 WIRES. PLASTIC 12"x17" VALVE BOX FOR MORE THAN 8 WIRES. TO BE BRANDED "P.B.".
3. VALVE ID TAG (TYP.)
4. WATERPROOF CONNECTORS (TYP.)
5. 12" PIGTAIL (MIN.) EACH SIDE OF WATERPROOF CONNECTOR
6. 3/8" PEA GRAVEL 1 CU.FT.
7. BRICK FOUNDATION AROUND BASE OF BOX (CONTINUOUS)

5 CONTROL WIRE PULL BOX IN PLASTIC BOX

SCALE:NTS

328409.79–05

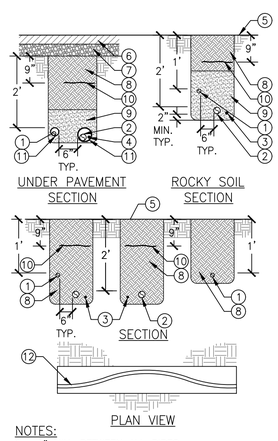

1. LATERAL (TYP.)
2. MAINLINE (TYP.)– IF RUNNING PARALLEL TO SIDEWALK, MAINLINE SHALL BE CLOSEST PIPE TO SIDEWALK.
3. LV. WIRING
4. LV. WIRING IN CONDUIT
5. FINISH GRADE
6. A.C. PAVING
7. BASE MATERIAL
8. SALVAGED EXCAVATED FILL COMPACTED TO ORIGINAL DENSITY
9. INITIAL SAND BACKFILL REQUIRED IN TRENCHES WITH ROCKY TERRAIN AND UNDER PAVEMENT (TYPICAL ALL SITUATIONS). LAY PIPE ON 2" SAND BED. SAND TO EXTEND 6" ABOVE SHALLOWEST PIPE.
10. 'ALARM TAPE'– CHRISTY'S OR APPROVED EQUAL. SEE NOTE 4.
11. PIPE SLEEVE 2X LINE SIZE 1 PIPE PER SLEEVE, WIRE CAN SHARE SLEEVE
12. ALL PVC PIPE TO BE SNAKED IN TRENCH AS SHOWN

NOTES:
1. 6" MIN. BETWEEN ALL PIPES.
2. SAND ENCASEMENT SHALL BE PLASTER OR MORTAR SAND.
3. SNAKE ALL PIPE AND WIRING IN TRENCH.
4. USE BLUE TAPE FOR POTABLE/DOMESTIC WATER AND PURPLE FOR RECYCLED WATER.
5. WIRING: TAPE AND BUNDLE WIRING AT 10'–0" INTERVALS. COMMON TRENCHING OF IRRIGATION PIPE AND REMOTE CONTROL VALVE WIRING TO BE DONE WHEREVER POSSIBLE (INSTALL TRACE WIRE ALONG ALL MAINLINE PIPE THAT DOES NOT HAVE CONTROL WIRES ADJACENT TO PIPE).
6. THERE SHALL BE A 10' MIN. SEPARATION BETWEEN POTABLE AND RECYCLED PRESSURIZED MAINLINES RUNNING PARALLEL.

4 PIPE TRENCH FOR LATERAL AND MAINLINE

SCALE:NTS

32 8409.76–03

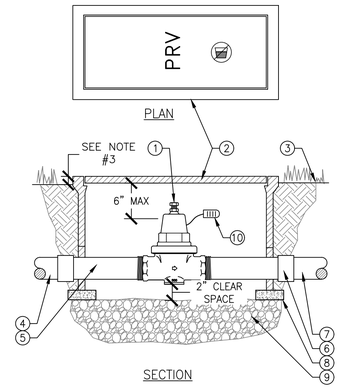

1. PRESSURE REDUCING VALVE. SEE LEGEND FOR ADDITIONAL INFORMATION.
2. RECTANGULAR VALVE BOX. HEAT BRAND "PRV" ON VALVE BOX LID IN 2" HIGH CHARACTERS.
3. FINISH GRADE.
4. PVC PIPE FROM POINT OF CONNECTION.
5. 12" LONG SCHEDULE 80 TOE NIPPLE. (TYPICAL)
6. PVC SxS COUPLING.
7. TO IRRIGATION SYSTEM.
8. COMMON BRICK (4 REQUIRED).
9. 3/4" CRUSHED ROCK 8" DEEP
10. "RECYCLED WATER TAG" AS PER SPECIFICATION. IF USING RECYCLED WATER

NOTES:
1. ALL VALVE BOXES USED IN CONJUNCTION WITH IRRIGATION SYSTEMS CARRYING RECYCLED WATER AREA SHALL BE PURPLE IN COLOR, AND SHALL INCLUDE THE WORDS "RECYCLED WATER – DO NOT DRINK" AND SHALL HAVE THE INTERNATIONAL SYMBOL CONVEYING THE SAME WARNING.
2. USE TEFLON TAPE ON ALL MALE PIPE THREADS.
3. 1" IN TURF AREAS, 2" IN SHRUB AREAS.

3 PRESSURE REGULATING VALVE

SCALE:NTS

328409.96–01

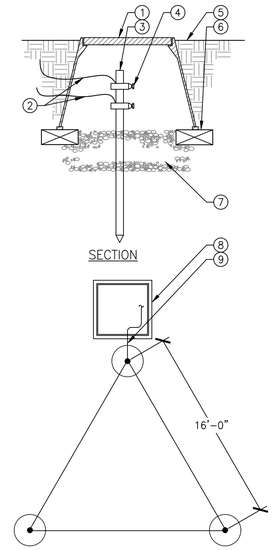

1. 9" PLASTIC VALVE BOX W/ BOLT DOWN COVER. HEAT BRAND "GND" ON LID
2. BARE COPPER WIRE (#10 AWG MIN.) BETWEEN GROUNDING RODS
3. GROUNDING ROD: 10 OHMS OR LESS
4. GROUNDING ROD CLAMP
5. FINISH GRADE
6. STANDARD BRICK IN 3 PLACES
7. 6" DEPTH OF PEA GRAVEL
8. CONTROLLER
9. SOLID BARE COPPER WIRE (#10 AWG MIN.) FROM GROUNDING ROD TO CONTROLLER. INSTALL WIRE AS SHORT AND STRAIGHT AS POSSIBLE

2 CONTROLLER GROUNDING LAYOUT

SCALE:NTS

328409.79–01

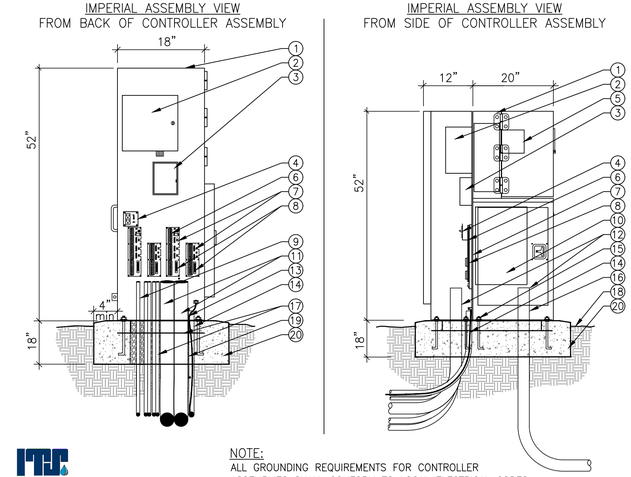

IMPERIAL TECHNICAL SERVICES

NOTE:
ALL GROUNDING REQUIREMENTS FOR CONTROLLER ASSEMBLIES SHALL CONFORM TO LOCAL ELECTRICAL CODES.

1. IMPERIAL ASSEMBLIES METERED CONTROLLER ASSEMBLY NEMA 3R RAINPROOF ENCLOSURE (UL LISTED)
2. CONTROLLER
3. INTERMATIC TIMER # 2845C (INDOOR MOUNT – 7 7/8"H X 5 1/8"W X 3 7/16" D)
4. POWER SWITCH/GFI RECEPTACLE
5. METER SOCKET WITH TEST BLOCKS
6. MASTER VALVE RELAY ASSEMBLY OR PUMP START RELAY ASSEMBLY (OPTIONAL)
7. TERMINAL BOARD
8. REMOTE RECEIVER CONNECTOR (OPTIONAL)
9. 1" PVC CONDUIT FOR 120 VAC FROM METERED POWER SUPPLY
10. LOAD CENTER COMPARTMENT, SEE MODEL NUMBER FOR PHASE TYPE, VOLTAGE, SIZE OF AMP, SIZE OF AMP FOR LOAD CENTER, AND THE NUMBER OF CIRCUITS
11. PVC CONDUIT FOR CONTROL WIRES, SIZE AS REQUIRED
12. PVC CONDUITS FOR CONTROL WIRES, ELECTRICAL, AND FLOW SENSING. SIZE AS REQUIRED.
13. #10 GROUND WIRE TO GROUND LUGS ON THE BACKBOARD
14. PVC CONDUIT FOR GROUNDING WIRE. 1" PVC CONDUIT FOR FLOW SENSOR CABLE
15. STAINLESS STEEL MOUNTING BASE WITH 3/8" STAINLESS STEEL BOLTS ANCHOR BOLTS IN THE CONCRETE
16. PVC CONDUIT AND ELECTRICAL POWER SOURCE
17. PAIGE CABLE P – 7162 – D (IF APPLICABLE)
18. FINISH GRADE
19. FILL VOIDS WITH 3/8" PEA GRAVEL POURED CONCRETE BASE
20. POURED CONCRETE BASE

1 IRRIGATION CONTROLLER IN METERED ENCLOSURE (ICA5)

SCALE:NTS

18" X 32" METERED CONTROLLER ASSEMBLY

328409.16–02

FN:01664L–5011ID
DATE: 5/2/19
XXX
PLOT SCALE: 1=1

No.	DATE	SHEET	APPROVAL	DESCRIPTION

REVISIONS

REF. X–XXXX

AS–BUILT:

DESIGNED BY: KM & SC
DRAWN BY: KM & SC
DESIGN CHECK BY:
DRAFTING CHECK BY:

REGISTERED LANDSCAPE ARCHITECT
No. 4053
A. Stevens Cook III
EXP. 10-31-21
STATE OF CALIFORNIA

Long Beach Municipal Urban Stormwater Treatment - Wetlands

LANDSCAPE IRRIGATION DETAILS

GRAPHIC SCALE 0 1 2 3

PAGE X.X.X.

FIELD BOOK X.X.X.

JOB NO. 224501187

NO. R–

SHEET 16 OF 26

DRAWING NO. ID–1

Stantec
Stantec Consulting Ltd.
38 Technology Drive
Irvine, Ca.
92618–5312
Tel. 949.923.6000
Fax. 949.923.6121
www.stantec.com

LAST SAVED BY: kmanguyen
PLOT DATE: Oct. 15, 20 SAVED PATH: C:\pwworkdir\D0539316

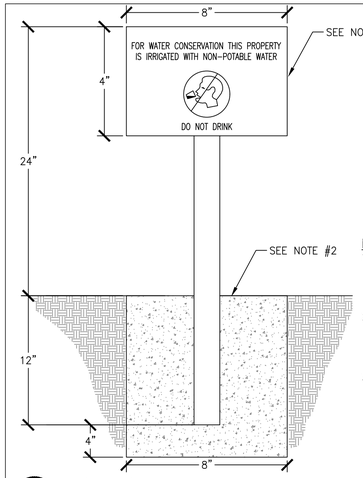

NOTES:
1. FOR VALVE BOXES USED IN IRRIGATION SYSTEMS USING RECYCLED WATER, COLOR AND TYPE OF VALVE BOX SHALL BE IN ACCORDANCE WITH AGENCY HAVING JURISDICTION.
2. FOR PERMANENT INSTALLATIONS PROVIDE CONCRETE MOWSTRIP IN TURF OR CONCRETE SUPPORT IN SHRUB AREAS. FOR TEMPORARY INSTALLATIONS, INSTALL IN SOIL WITHOUT MOWSTRIP.
3. CHRISTY#ID-SIGN-4X8 RECYCLED WATER SIGN. SECURE SIGN TO POST WITH 3/8" STAINLESS STEEL NUTS AND BOLTS AT A MINIMUM OF TWO LOCATIONS- LENGTH AS REQUIRED. USE 1" DIAMETER WASHER TO PROTECT SIGN.

11 NON-POTABLE WATER WARNING SIGN

SCALE:NTS

32 8409.99-02

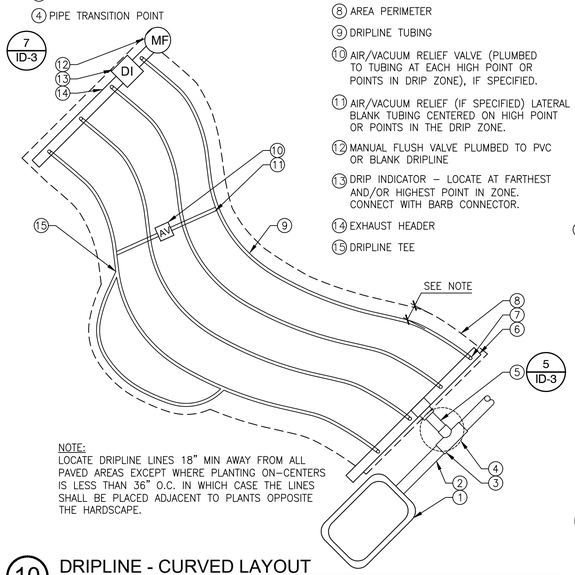

1. REMOTE CONTROL VALVE WITH DISC FILTER AND PRV
2. MAIN LATERAL LINE, SEE PLAN FOR SIZE
3. PVC TEE
4. PIPE TRANSITION POINT
5. TRANSITION POINT. LATERAL PIPE TO SUPPLY HEADER, SEE PLAN FOR SIZE.
6. PVC SUPPLY HEADER
7. CONNECTION TO SUPPLY HEADER
8. AREA PERIMETER
9. DRIPLINE TUBING
10. AIR/VACUUM RELIEF VALVE (PLUMBED TO TUBING AT EACH HIGH POINT OR POINTS IN DRIP ZONE), IF SPECIFIED.
11. AIR/VACUUM RELIEF (IF SPECIFIED) LATERAL BLANK TUBING CENTERED ON HIGH POINT OR POINTS IN THE DRIP ZONE.
12. MANUAL FLUSH VALVE PLUMBED TO PVC OR BLANK DRIPLINE
13. DRIP INDICATOR – LOCATE AT FARTHEST AND/OR HIGHEST POINT IN ZONE. CONNECT WITH BARB CONNECTOR.
14. EXHAUST HEADER
15. DRIPLINE TEE

NOTE:
LOCATE DRIPLINE LINES 18" MIN AWAY FROM ALL PAVED AREAS EXCEPT WHERE PLANTING ON-CENTERS IS LESS THAN 36" O.C. IN WHICH CASE THE LINES SHALL BE PLACED ADJACENT TO PLANTS OPPOSITE THE HARDSCAPE.

10 DRIPLINE - CURVED LAYOUT

SCALE:NTS

32 8413.56-08

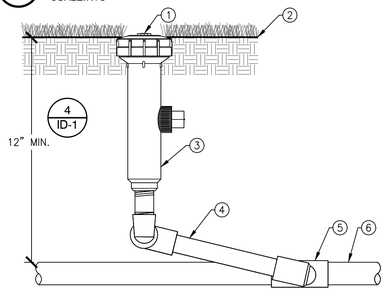

SECTION/ELEVATION

1. FACTORY INSTALLED PURPLE CAP IF USED FOR RECYCLED WATER.
2. FINISHED GRADE
3. POP-UP SPRINKLER BODY SEE IRRIGATION LEGEND FOR MODEL
4. MANUFACTURED SWING JOINT ASSEMBLY
5. PVC TEE (FPTxSLIP)
6. PVC LATERAL PIPE

NOTES:
1. ALL FITTINGS SHALL BE SCH. 40 PVC. ALL NIPPLES SHALL BE SCH. 80.
2. CLOSE NIPPLES (1") SHALL NOT BE USED.
3. INSTALL PVC ELLS SO AS TO TIGHTEN WITH DOWNWARD THRUST.
4. TEFLON TAPE SHALL BE USED AT ALL THREADED CONNECTIONS FROM THE PVC LATERAL TO THE BASE OF THE HEAD.
5. HEADS SHALL BE INSTALLED 6" MINIMUM DISTANCE FROM ALL HARDSCAPE.

9 IRRIGATION HEAD - POP UP

SCALE:NTS

32 8403.26-09

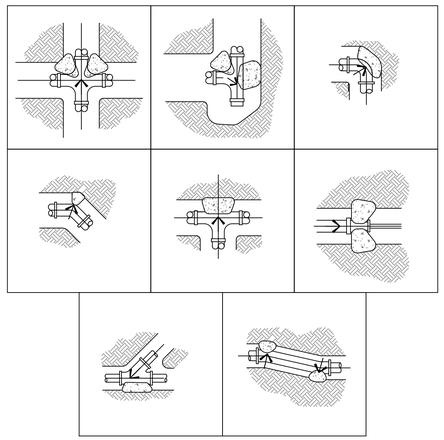

NOTES:
1. ALL THRUST BLOCKS AND MAIN LINES SHALL BE INSTALLED, SIZED AND TESTED ACCORDING TO THE MANUFACTURER'S RECOMMENDATIONS.
2. ALL PIPES GREATER THAN 2" SHALL BE INSTALLED USING THRUST BLOCKS AS SHOWN.
3. AT THE CONTRACTOR'S OPTION, OTHER MECHANICAL JOINT RESTRAINT SYSTEMS MAY BE SUBMITTED FOR APPROVAL PRIOR TO INSTALLATION.

8 THRUST BLOCK

SCALE:NTS

328409.76-02

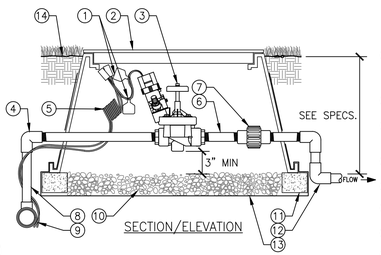

NOTES:
1. INSTALL ONE VALVE PER BOX.
2. TEFLON TAPE SHALL BE USED AT ALL THREADED CONNECTIONS.
3. SET TOP OF BOX AT 3" ABOVE FINISHED GRADE IN PLANTER AREAS. 1" ABOVE IN LAWN AREAS. INSTALL VALVE BOX EXTENSION IF NECESSARY.

1. VALVE ID TAG & RECYCLED WATER TAG (ENGLISH & SPANISH) – IF USING RECYCLED WATER
2. RECTANGULAR VALVE BOX WITH BOLT-DOWN COVER – PURPLE IN COLOR WITH "RECYCLE WATER" INTEGRAL LETTERING IF USING RECYCLED WATER, GREEN IN COLOR IF USING POTABLE WATER – HEAT BRAND VALVE & CONTROLLER ASSIGNMENT IN 2" TALL CHARACTERS ON COVER.
3. REMOTE CONTROL VALVE SEE IRRIGATION SCHEDULE FOR TYPE & SIZE
4. (2) PVC ST ELBOW (TYP.)
5. 18" SERVICE COIL WITH PENTITE OR EQUAL WIRE CONNECTORS.
6. (3) PVC SCH. 80 NIPPLE (TYP.)
7. SCH. 80 PVC UNION
8. PVC PIPE – CUT TO FIT (TYP.)
9. PVC PRESSURE LINE
10. 3/8" PEA GRAVEL – 6" DEEP
11. BRICK SUPPORTS (CONTINUOUS)
12. PVC SS ELBOW
13. LANDSCAPE FABRIC BELOW GRAVEL – WRAP SIDES, BOX BOTTOM & COVER ALL OPENINGS
14. FINISH GRADE

7 REMOTE CONTROL VALVE IN PLASTIC BOX

SCALE:NTS

POTABLE OR RECYCLED WATER

328406.13-05

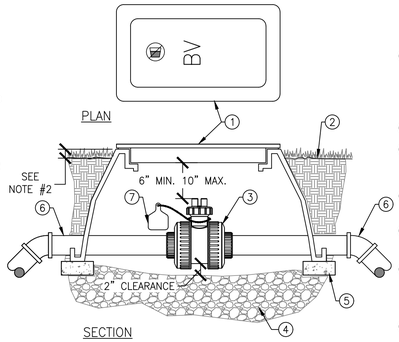

1. RECTANGULAR VALVE BOX WITH BLACK BOLT-DOWN COVER – HEAT BRAND "BV" ON VALVE BOX COVER IN 2" HIGH LETTERS.
2. FINISH GRADE
3. LASCO "SLO-CLOSE" SOCKET X SOCKET SCH. 80 BALL VALVE
4. 3/4" CRUSHED ROCK – 8" MINIMUM DEPTH
5. COMMON BRICK (2 REQUIRED)
6. PVC IRRIGATION PRESSURE MAINLINE PIPING. ANGLE PIPE TO SPECIFIED DEPTH WITH 45 DEG. ELLS
7. "RECYCLED WATER TAG" PER SPECIFICATION

NOTES:
1. ALL VALVE BOXES USED IN CONJUNCTION WITH IRRIGATION SYSTEMS CARRYING RECYCLED WATER AREA SHALL BE PURPLE IN COLOR, AND SHALL INCLUDE THE WORDS "RECYCLED WATER – DO NOT DRINK" AND SHALL HAVE THE INTERNATIONAL SYMBOL CONVEYING THE SAME WARNING
2. 1" IN TURF AREAS. 2" IN SHRUB AREAS.

6 BALL VALVE (3" AND SMALLER)-SLO-CLOSE

SCALE:NTS

328406.33-01

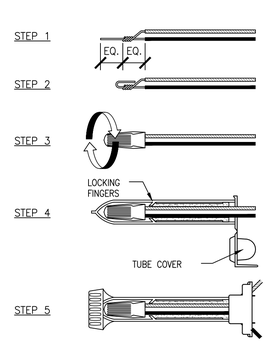

LEGEND

STRIP BOTH WIRES. TWIST STRAND AROUND RIGID STRAND OVER HALF THE LENGTH OF STRIPPED WIRES.

FOLD THE OTHER HALF OF THE RIGID STRAND OVER TWISTED STRAND AS SHOWN.

INSERT THE TWISTED SPLICE INTO THE "Y" ELECTRICAL SPRING CONNECTION AND TWIST OVER WIRE STRANDS IN A CLOCKWISE DIRECTION.

INSERT THE CONNECTOR INTO THE GEL-FILLED DIRECT BURY SPLICE KIT. PUSH PAST THE LOCKING FINGERS TO SECURE CONNECTOR INSIDE TUBE.

POSITION ALL THE WIRES THROUGH THE DEDICATED INSULATOR CHANNELS AND SNAP INSULATOR TUBE COVER CLOSED.

5 3M "DBR/Y-6" WIRE CONNECTOR

SCALE:NTS

328409.79-04

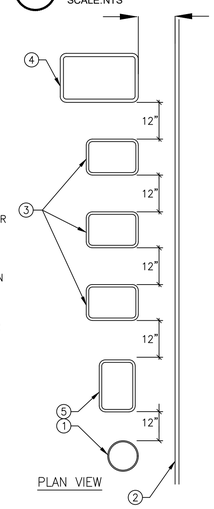

1. 10" DIAMETER CIRCULAR VALVE BOX
2. EDGE OF TURF, WALK, FENCE, CURB, ETC
3. 12" x 18" RECTANGULAR VALVE BOX
4. 20" x 30" RECTANGULAR VALVE BOX
5. 2 ISOLATION VALVES

NOTES:
1. CENTER VALVE BOX OVER VALVE TO FACILITATE SERVICING OF VALVE.
2. SET VALVE BOXES 2" MAXIMUM ABOVE GRADE IN MULCH COVER OR GROUNDCOVER/SHRUB AREAS –SET 1" ABOVE FINISH GRADE IN TURF AREAS.
3. SET VALVE BOX AND VALVE ASSEMBLY IN GROUNDCOVER/SHRUB AREA WHERE POSSIBLE – INSTALL IN TURF ONLY IF THERE IS NO ADJACENT GROUNDCOVER/SHRUB AREA.
4. SET VALVE BOXES PARALLEL TO ONE ANOTHER AND PERPENDICULAR TO EDGE.
5. AVOID HEAVY COMPACTION OF SOIL AROUND VALVE BOXES TO PREVENT THEIR DEFORMATION/COLLAPSE.
6. ALL VALVE BOXES USED IN CONJUNCTION WITH IRRIGATION SYSTEMS CARRYING RECYCLED WATER AND ARE ALSO INSTALLED WITHIN THE IRWD SERVICE AREA SHALL BE BLACK IN COLOR. NEITHER PURPLE LIDS NOR PURPLE TAGS ATTACHED TO LIDS WILL BE ALLOWED. CONTRACTOR SHALL SPECIAL ORDER BLACK VALVE BOX LIDS TO CONFORM TO IRWD REQUIREMENTS AND SHALL INCLUDE THE WORDS "RECYCLED WATER – DO NOT DRINK" AND SHALL HAVE THE INTERNATIONAL SYMBOL CONVEYING THE SAME WARNING.

4 VALVE BOX LAYOUT SHARED ISOLATION VALVE

SCALE:NTS

328406.13-03

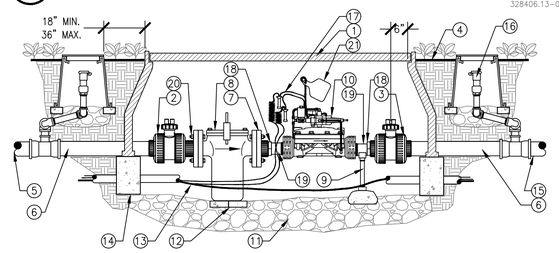

1. 30" DEEP VALVE BOX WITH PLASTIC BOLT-DOWN COVER. SEE SPECIFICATION FOR SIZE AND TYPE OF BOX REQUIRED.
2. LASCO "SLO-CLOSE" SOCKET X FLANGE SCH. 80 BALL VALVE. SEE PLANS FOR ASSEMBLY SIZE.
3. LASCO "SLO-CLOSE" SOCKET X SOCKET SCH. 80 BALL VALVE. SEE PLANS FOR ASSEMBLY SIZE.
4. FINISHED GRADE
5. FROM POINT OF CONNECTION – ANGLE TO SPECIFIED DEPTH W/45 DEGREE ELLS (TYP.)
6. SCH. 80 PVC PIPE – LENGTH AS REQUIRED. SEE PLANS FOR ASSEMBLY SIZE (TYPICAL).
7. LASCO SCH. 80 PVC LOOSE RING FLANGE
8. WATTS #97FB-CSSIB OR KECKLEY #SSGFV BASKET STRAINER W/40 MESH STAINLESS STEEL SCREEN – SEE PLANS FOR ASSEMBLY SIZE.
9. ADJUSTABLE PIPE SADDLE SUPPORT WITH 12" x 12" x 6" CONCRETE BASE UNDER SUPPORT
10. MASTER CONTROL VALVE AND/OR PRESSURE REDUCING MASTER VALVE – SEE PLANS AND SCHEDULE FOR SIZE AND TYPE.
11. 3/4" CRUSHED ROCK – 12" DEEP
12. COMMON BRICK (4 REQUIRED)
13. FLOW SENSOR WIRE WITHIN CONDUIT. SEE SPECIFICATION FOR ADDITIONAL INFORMATION.
14. SINGLE COARSE OF CINDER BLOCK ALONG ENTIRE EDGE OF VALVE BOX
15. TO IRRIGATION SYSTEM – ANGLE TO SPECIFIED DEPTH W/45 DEGREE ELLS
16. QUICK COUPLING VALVE PER SPECIFICATIONS – SEE QUICK COUPLING VALVE DETAIL FOR INSTALLATION INSTRUCTIONS
17. CONTROL AND COMMON WIRES AND CONNECTORS TO DESIGNATED AUTOMATIC CONTROLLER WITHIN CONDUIT
18. SCH. 80 PVC SPIGOT X SOCKET BUSHING – SEE PLANS FOR ASSEMBLY SIZE (TYPICAL).
19. SCH. 80 PVC TOE NIPPLE. ALLOW 3" OF EXPOSED PIPE BETWEEN VALVE AND OTHER EQUIPMENT – LENGTH AS REQUIRED (TYPICAL).
20. 416 STAINLESS STEEL NUTS AND BOLTS WITH FLANGE GASKET (TYPICAL).
21. RECYCLED WATER LABEL IF USING RECYCLED WATER.

3 STRAINER/MASTER VALVE/QC ASSEMBLY 1-1/2" - 3"

SCALE:NTS

328406.23-01

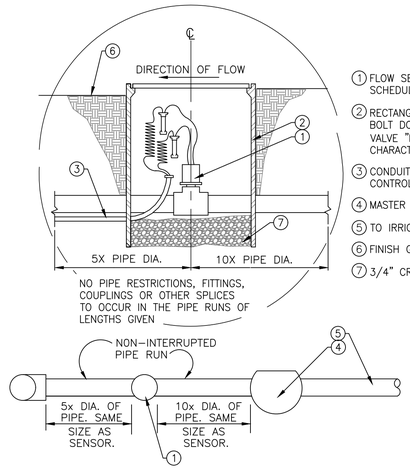

1. FLOW SENSOR, SEE IRRIGATION SCHEDULE
2. RECTANGULAR VALVE BOX W/BLACK BOLT DOWN COVER. HEAT BRAND VALVE "FS" ON LID IN 2" HIGH CHARACTERS
3. CONDUIT BACK TO DECODER AT CONTROLLER
4. MASTER VALVE, SEE PLAN FOR SIZE
5. TO IRRIGATON POINT OF CONNECTION
6. FINISH GRADE
7. 3/4" CRUSHED ROCK 6" MIN. DEEP

NOTE:
ALL VALVE BOXES USED IN CONJUNCTION WITH IRRIGATION SYSTEMS CARRYING RECYCLED WATER SHALL BE PURPLE IN COLOR, SHALL INCLUDE THE WORDS "RECYCLED WATER – DO NOT DRINK" AND SHALL HAVE THE INTERNATIONAL SYMBOL CONVEYING THE SAME WARNING.

2 FLOW SENSOR / MASTER VALVE LAYOUT

SCALE:NTS

328409.63-02

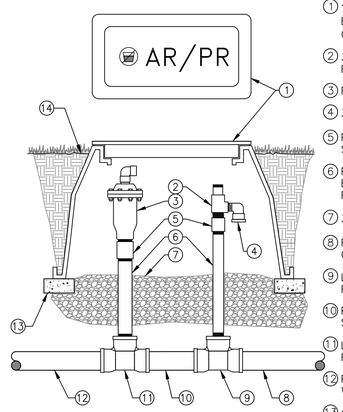

1. 12" X 18" RECTANGULAR IRRIGATION VALVE BOX WITH BLACK LID. HEAT BRAND "AR/PR" ON VALVE BOX LID IN 2" HIGH CHARACTERS
2. 3/4" WATTS 530C CALIBRATED PRESSURE RELIEF VALVE
3. PRESSURE AIR RELEASE VALVE – SEE PLAN
4. 3/4" PVC STREET ELL
5. PVC TxT SCHEDULE 80 COUPLING. SAME SIZE AS EQUIPMENT INLET SIZE
6. PVC SCHEDULE 80 NIPPLE. SAME SIZE AS EQUIPMENT INLET SIZE. LENGTH AS REQUIRED
7. 3/4" CRUSHED ROCK – 12" DEEP
8. PVC MAINLINE TO IRRIGATION POINT OF CONNECTION ASSEMBLY
9. LINE SIZE PVC MAINLINE FITTING WITH 3/4" FIPT OUTLET
10. PVC MAINLINE PIPE. SEE DRAWINGS FOR SIZE AND TYPE
11. LINE SIZE PVC MAINLINE FITTING WITH 1" FIPT OUTLET
12. PVC MAINLINE FROM IRRIGATION WATER METER
13. COMMON BRICK (4 REQUIRED)
14. FINISH GRADE

NOTE:
ALL VALVE BOXES USED IN CONJUNCTION WITH IRRIGATION SYSTEMS CARRYING RECYCLED WATER AREA SHALL BE PURPLE IN COLOR, AND SHALL INCLUDE THE WORDS "RECYCLED WATER – DO NOT DRINK" AND SHALL HAVE THE INTERNATIONAL SYMBOL CONVEYING THE SAME WARNING.

1 POINT OF CONNECTION PROTECTION ASSEMBLY

SCALE:NTS

FN:01664L-5012ID
DATE: 5/2/19
XXX
PLOT SCALE: 1=1

Stantec
Stantec Consulting Ltd.
38 Technology Drive
Irvine, Ca.
92618-5312
Tel. 949.923.6000
Fax. 949.923.6121
www.stantec.com

REVISIONS				
No.	DATE	SHEET	APPROVAL	DESCRIPTION

AS-BUILT:

REF. X-XXXX

DESIGNED BY: KM & SC
DRAWN BY: KM & SC
DESIGN CHECK BY:
DRAFTING CHECK BY:

REGISTERED LANDSCAPE ARCHITECT
No. 4053
A. Stevens Cook III
EXP. 10-31-21
STATE OF CALIFORNIA

Long Beach Municipal Urban Stormwater Treatment - Wetlands

LANDSCAPE IRRIGATION DETAILS

GRAPHIC SCALE 0 1 2 3

PAGE X.X.X.

FIELD BOOK X.X.X.

JOB NO. 224501187

NO. R-

SHEET 17 OF 26

DRAWING NO. ID-2

LAST SAVED BY: kmcnguyen
PLOT DATE: Oct. 15, 20 SAVED PATH: C:\pwworkdir\d0539316

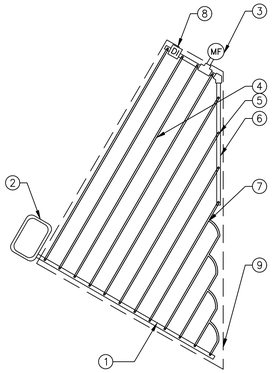

1. SUPPLY HEADER
2. REMOTE CONTROL VALVE WITH FILTER AND PRESSURE REGULATING VALVE
3. MANUAL FLUSH VALVE PLUMBED TO BROWNLINE PVC OR BLANK DRIPLINE TUBING
4. TECHLINE® HCVXR DRIPLINE
5. TECHLINE® START CONNECTION MALE ADAPTER
6. EXHAUST HEADER
7. TECHLINE® TEE
8. DRIP INDICATOR – LOCATE AT FARTHEST POINT IN ZONE. CONNECT WITH BARB CONNECTOR.
9. AREA PERIMETER

10 TECHLINE® HCVXR IRREGULAR AREAS

SCALE:NTS

328413.56–10

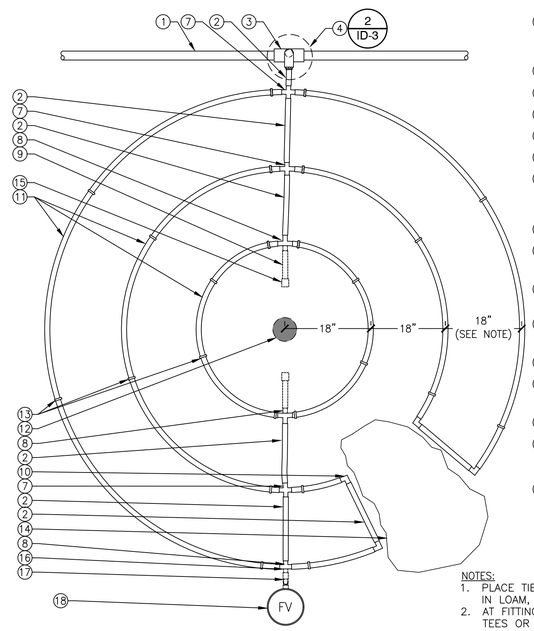

PLAN VIEW

1. PVC LATERAL PIPE – SEE NOTE AND SPECS FOR DEPTH. ALSO SEE PLAN AND SCHEDULE FOR ADDITIONAL INFORMATION (SUCH AS SIZE, TYPE, ETC.).
2. NETAFIM BLANK TUBING – LENGTH AS REQUIRED
3. PVC SCH 40 SxFPT TEE
4. PIPE TRANSITION POINT
7. BARB CROSS INSERT FITTING: NETAFIM TLCROS
8. BARB TEE OR CROSS INSERT FITTING: NETAFIM TLTEE
9. 9" DRIP TUBE EXTENSION (FOR USE ONLY WITH 3" DIAMETER RING AND 1 GAL. & 5 GAL. CONTAINER STOCK).
10. BARB ELBOW: NETAFIM TLELL
11. DRIPLINE: NETAFIM DRIPLINE (SEE PLAN OR SCHEDULE FOR TYPE AND SPACING)
12. TREE/SHRUB TRUNK– DRIPLINE IS 18" CENTER POINT FROM TRUNK
13. TIE DOWN STAKE, TYP. (QUANTITY AS REQUIRED, SEE NOTES 2–3 BELOW)
14. OBSTRUCTION – BLANK TUBING TO CLEAR.
15. GPH EMITTER GPSTCVOSD (FOR USE WITH 3' DIAMETER AND 1 & 5 GALLON CONTAINERS ONLY)
16. BARB CROSS IF FLUSH VALVE IS SHOWN ON THE PLANS.
17. 2 @ BARB ELBOW: NETAFIM TLELL AND BLANK TUBING TO BRING BELOW GRADE TO THE BOTTOM OF THE VALVE BOX.
18. FLUSH VALVE IF SHOWN ON THE PLAN. (7 / ID-3)

NOTES:
1. PLACE TIE DOWN STAKES EVERY TWO FEET IN SAND, THREE FEET IN LOAM, AND FOUR FEET IN CLAY.
2. AT FITTINGS WHERE THERE IS A CHANGE OF DIRECTION SUCH AS TEES OR ELBOWS, USE TIE–DOWN STAKES ON EACH LEG OF THE CHANGE OF DIRECTION AND NOT GREATER THAN 3' O.C.
3. DRIPLINE IS TO BE SET ON GRADE AND COVERED WITH MULCH.
4. SEE PLAN OR SCHEDULE FOR NUMBER OF RINGS

9 DRIPLINE AROUND SHRUB OR TREE

SCALE:NTS

32 8413.56–13

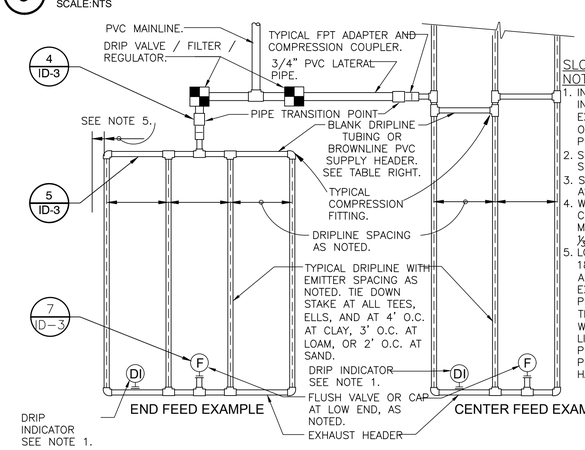

SLOPED CONDITION NOTES:
1. INSTALL DRIP INDICATOR ON EXHAUST HEADER(S) OR AS SHOWN ON PLANS.
2. SPACING AT TOP ⅔ OF SLOPE AS NOTED.
3. SPACING AT BOTTOM ⅓ AS NOTED PLUS 25%.
4. WHEN ELEVATION CHANGE IS 10 FT OR MORE, ZONE BOTTOM ⅓ SEPARATELY.
5. LOCATE DRIPLINE LINES 18" MIN. AWAY FROM ALL PAVED AREAS EXCEPT WHERE PLANTING IS LESS THAN 36" O.C. IN WHICH CASE THE LINES SHALL BE PLACED ADJACENT TO PLANTS OPPOSITE THE HARDSCAPE.

MAXIMUM LATERAL LENGTH (FEET)

	EMITTER FLOW RATE GPH					
	12" SPACING		18" SPACING		24" SPACING	
PSI	0.53	0.77	0.53	0.77	0.53	0.77
25	173	136	246	192	-	244
30	240	187	341	266	-	338
40	315	247	449	351	-	446
50	366	287	521	408	-	520
60	406	318	579	453	-	578

GRID PRECIPITATION RATES (IN/HR)

EMITTER SPACING	LATERAL SPACING	EMITTER FLOW RATE 0.53	EMITTER FLOW RATE 0.77
12	12	0.85	1.23
18	18	0.38	0.55
24	24	0.21	0.31

LATERAL FLOW PER 100 FT (GPM)

EMITTER FLOW	12" SPACING	18" SPACING	24" SPACING
0.53 GPH	0.88 GPM	0.59 GPM	0.44 GPM
0.77 GPH	1.28 GPM	0.86 GPM	0.64 GPM

PIPE SIZING FOR DRIP HEADER

	MAX GPM	PSI LOSS
SCHEDULE 40 PVC HEADER SIZE		
1/2"	4.7 GPM	7.7 PSI
3/4"	8.3 GPM	5.6 PSI
1"	13.5 GPM	4.2 PSI
1-1/2"	33.9 GPM	2.9 PSI
2"	52.4 GPM	1.9 PSI
POLY PIPE HEADER SIZE		
1/2"	4.7 GPM	8.8 PSI
3/4"	8.3 GPM	6.3 PSI
1"	13.5 GPM	4.8 PSI
1-1/2"	31.8 GPM	2.9 PSI
2"	52.4 GPM	2.2 PSI

8 TYPICAL DRIPLINE LAYOUT REQUIREMENTS NETAFIM HCVXR

SCALE:NTS

328413.43–08

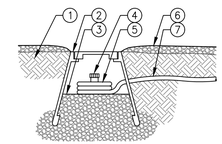

SECTION

1. TOP SOIL
2. 8" DIA. ROUND, PLASTIC VALVE BOX
3. 1/4" PEA GRAVEL – 6" DEEP
4. FLUSH CAP
5. COIL TUBING
6. MULCH
7. BLANK DRIP TUBING

7 MANUAL FLUSH VALVE

SCALE:NTS

328413.49–04

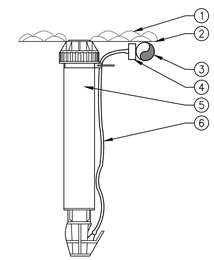

1. MULCH OR PLANTING
2. FINISH GRADE
3. 17MM POLYETHYLENE TUBING
4. 1/4" SELF–PIERCING BARB CONNECTOR
5. DRIP SYSTEM OPERATION INDICATOR KIT
6. 1/4" DISTRIBUTION TUBING (LENGTH AS REQUIRED)

NOTES:
1. DRIP INDICATOR. SEE IRRIGATION SCHEDULE FOR TYPE.
2. INSTALL 1 PER VALVE
3. SUBMIT MFG. CUT SHEET FOR APPROVAL

6 DRIP INDICATOR

SCALE:NTS

328413.83–01

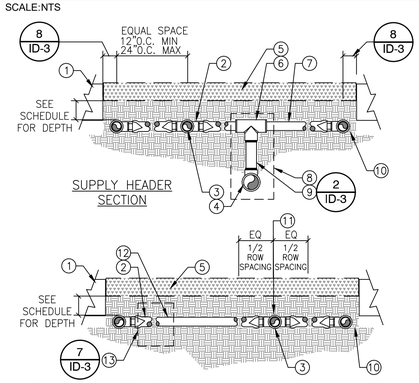

SUPPLY HEADER SECTION

EXHAUST HEADER SECTION

1. PLANTER EDGE
2. DRIPLINE TEE
3. CONNECTION TO PRESSURE COMPENSATING DRIPLINE
4. PVC SCHEDULE 40 PIPE TO ELECTRIC VALVE
5. MULCH PER LANDSCAPE PLAN. SEE PLANTING SCHEDULE FOR DEPTH OVER DRIPLINE.
6. 2–WAY TRANSITION TEE FROM DRIPLINE TO PVC
7. DRIPLINE
8. PIPE TRANSITION POINT
9. PVC SHEDULE 80 RISER
10. FINISH GRADE
11. PLANT LOCATIONS SHALL BE SPACED PER PLANTING PLAN BETWEEN DRIP LINES (TYP.)
12. PVC BROWNLINE OR BLANK DRIPLINE TUBING (NO EMITTERS)
13. FLUSH VALVE LOCATED AT EACH EXHAUST HEADER

5 DRIPLINE SUPPLY AND EXHAUST HEADERS SUBSURFACE

SCALE:NTS

328413.43–12

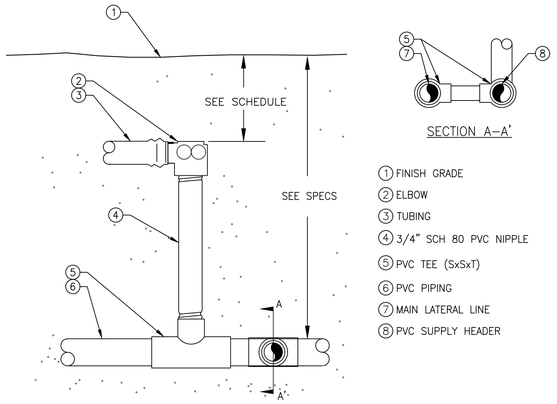

SECTION A–A'

1. FINISH GRADE
2. ELBOW
3. TUBING
4. 3/4" SCH 80 PVC NIPPLE
5. PVC TEE (SxSxT)
6. PVC PIPING
7. MAIN LATERAL LINE
8. PVC SUPPLY HEADER

4 DRIP LINE-TRANSITION POINT/START CONNECTION

SCALE:NTS

ELBOW CONNECTION

328413.43–03

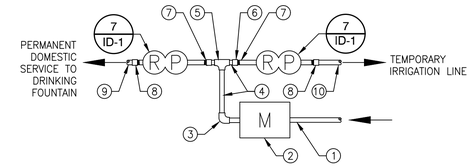

1. EXISTING SERVICE LINE
2. EXISTING METER
3. COPPER ELBOW
4. TYPE K COPPER PIPE – 2"
5. COPPER TEE
6. COPPER FEMALE ADAPTER
7. BEGINNING OF REVERSE PRINCIPAL BACKFLOW PREVENTER. SEE SCHEDULE AND DETAIL.
8. DOWN STREAM END OF BACKFLOW PREVENTER
9. COPPER PIPE TO DRINKING FOUNTAIN – 3/4"
10. TEMPORARY WHITE PVC LINE WITH CHRISTY'S BLUE, 2" POTABLE WATER TAPE INSTALLED PER DETAIL.

3 DRINKING FOUNTAIN AND TEMP. IRRIGATION SERVICE

SCALE:NTS

32 8409.73–11

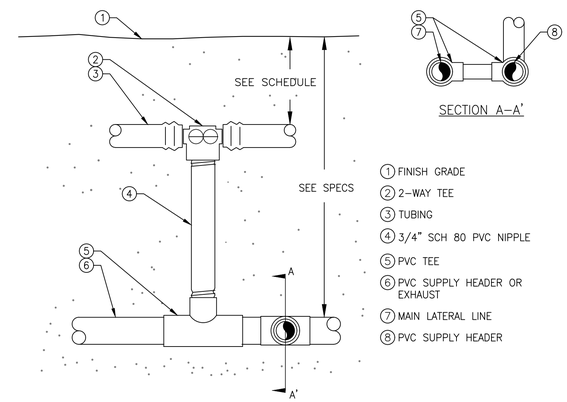

SECTION A–A'

1. FINISH GRADE
2. 2–WAY TEE
3. TUBING
4. 3/4" SCH 80 PVC NIPPLE
5. PVC TEE
6. PVC SUPPLY HEADER OR EXHAUST
7. MAIN LATERAL LINE
8. PVC SUPPLY HEADER

2 DRIP LINE -TRANSITION POINT/START CONNECTION

SCALE:NTS

TEE CONNECTION

328413.43–02

1. JUMBO RECTANGULAR VALVE BOX (19.8" X 26.3") WITH BOLT–DOWN COVER – PURPLE IN COLOR WITH "RECYCLE WATER" INTEGRAL LETTERING IF USING RECYCLED WATER, GREEN IN COLOR IF USING POTABLE WATER – HEAT BRAND VALVE & CONTROLLER ASSIGNMENT IN 2" TALL CHARACTERS ON COVER.
2. CONTROL ZONE KIT SEE LEGEND FOR TYPE & SIZE (IF SPECIFIED)
3. (2) PVC ST ELBOW (TYP.)
4. 18" SERVICE COIL WITH PENTITE OR EQUAL WIRE CONNECTORS.
5. PVC SCH. 80 NIPPLE (TYP.)
6. SCH. 80 PVC UNION
7. PVC PIPE – CUT TO FIT (TYP.)
8. PVC PRESSURE LINE
9. 3/8" PEA GRAVEL 1 CU.FT.
10. VALVE ID TAG AND RECYCLED WATER TAG (ENGLISH & SPANISH) – IF USING RECYCLED WATER
11. BRICK SUPPORTS (CONTINUOUS)
12. PVC SS ELBOW
13. WATERPROOF WIRE CONNECTERS, WIRE SPLICES SHALL BE MADE USING "SCOTCH–PAC", "PEN–TITE","DBY", "SPEERS", DS–400 OR APPROVED EQUAL.
14. BALL VALVE– SEE SCHEDULE FOR TYPE & SIZE
15. FILTER– SEE SCHEDULE FOR TYPE & SIZE
16. CONTROL VALVE– SEE SCHEDULE FOR TYPE & SIZE
17. PRESSURE REGULATOR– SEE SCHEDULE FOR TYPE & SIZE

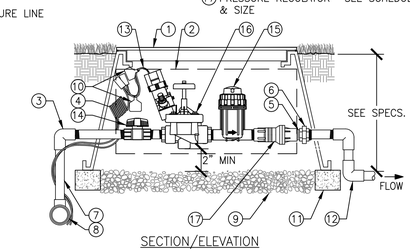

SECTION/ELEVATION

NOTES:
1. INSTALL ONE VALVE PER BOX.
2. TEFLON TAPE SHALL BE USED AT ALL THREADED CONNECTIONS.
3. SET TOP OF BOX AT 3" ABOVE FINISHED GRADE IN PLANTER AREAS. 1" ABOVE IN LAWN AREAS. INSTALL VALVE BOX EXTENSION IF NECESSARY.

1 REMOTE CONTROL VALVE DRIP ZONE ASSEMBLY

SCALE:NTS

328413.76–04
FN:01664L–5013ID
DATE: 5/2/19
XXX
PLOT SCALE: 1=1

No.	DATE	SHEET	APPROVAL	DESCRIPTION

REVISIONS

AS–BUILT:

REF. X–XXXX

DESIGNED BY: KM & SC
DRAWN BY: KM & SC
DESIGN CHECK BY:
DRAFTING CHECK BY:

REGISTERED LANDSCAPE ARCHITECT No. 4053 A. Stevens Cook II EXP. 10-31-21 STATE OF CALIFORNIA

Long Beach Municipal Urban Stormwater Treatment - Wetlands

LANDSCAPE IRRIGATION DETAILS

GRAPHIC SCALE 0 1 2 3

PAGE X.X.X.

FIELD BOOK X.X.X.

Stantec

Stantec Consulting Ltd.
38 Technology Drive
Irvine, Ca.
92618–5312
Tel. 949.923.6000
Fax. 949.923.6121
www.stantec.com

JOB NO. 224501187

NO. R–

SHEET 18 OF 26

DRAWING NO. ID–3

LAST SAVED BY: kmcnguyen
PLOT DATE: Oct. 15, 20 SAVED PATH: C:\pwworkdir\d0539316

IMAGE 1

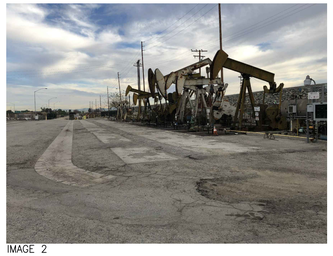

IMAGE 2

IMAGE 3

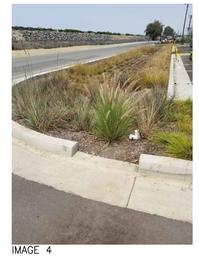

IMAGE 4

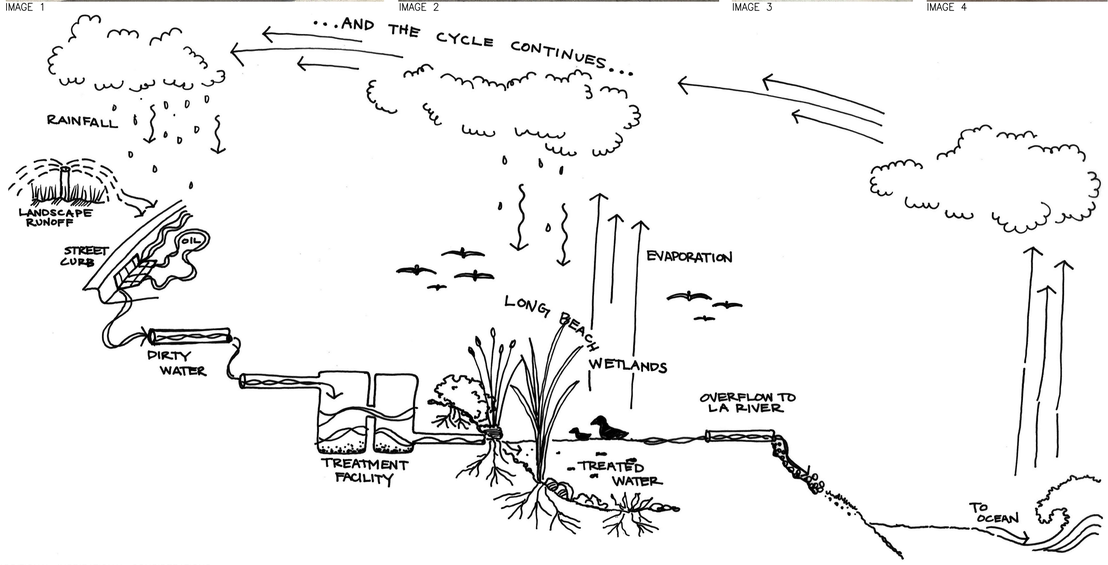

ADDITIONAL INSPIRATIONAL CONSIDERATIONS:

1. WETLAND INTERPRETIVE SIGN LANGUAGE: THE LONG BEACH WETLANDS COVER ABOUT 2 ACRES AND ARE BUILT, MEANING THIS WAS ONCE A FLAT SITE WITH A COMMERCIAL ENDEAVOR (SEE IMAGE 1 ABOVE). PLANTS NATIVE TO THIS AREA OF CALIFORNIA WERE PLANTED AND CHOSEN FOR THEIR ABILITY TO GROW IN BRACKISH (SALTY) CONDITIONS. WETLANDS ARE FUNCTIONING SYSTEMS THAT ALSO CREATE HABITAT AND BEAUTY. MIGRATING AND LOCAL BIRDS COME TO BUILD NESTS AND FORAGE FOR FOOD. THEY ADDITIONALLY CLEAN URBAN WATER RUNOFF BY FILTERING OUT AND USING POLLUTANTS. UPTAKE IN NITROGEN AND PHOSPHOROUS AID IN WETLAND PLANT GROWTH AND INCOMING SEDIMENT AND HEAVY METALS ARE FILTERED THROUGH THEIR ROOTS AND LEAVES. THE AMOUNT OF WATER THAT ENTERS THE WETLAND DEPENDS ON STORMS AND URBAN RUNOFF. URBAN RUNOFF COMES FROM EXCESS WATER THAT FLOWS TO THE STORM DRAIN SYSTEM VIA SPRINKLERS, CAR WASHING, AND CONSTRUCTION ACTIVITY (SEE IMAGE 2 ABOVE). THESE ARE JUST A FEW WAYS THAT WATER CAN BE WASTED AND POLLUTED. THE OVERFLOW IN THE WETLANDS WILL EVENTUALLY LEAD TO THE OCEAN, SO CLEANING IT IS OF UTMOST IMPORTANT TO OUR COMMUNITY AND ENVIRONMENT.
2. TREATMENT FACILITY INTERPRETIVE SIGN LANGUAGE: THE LONG BEACH TREATMENT FACILITY ALLOWS FOR CLEANER WATER TO ENTER INTO THE WETLAND SYSTEM ACROSS THE STREET. URBAN WATER RUNOFF IS DIRECTED TO THE FACILITY FOR A FIRST FILTER AND THE WETLANDS ACT AS A SECOND FILTER FOR POLLUTED WATER. THE AMOUNT OF WATER THAT ENTERS THE FACILITY DEPENDS ON STORMS AND URBAN RUNOFF (SEE IMAGE 3 ABOVE). URBAN RUNOFF COMES FROM EXCESS WATER THAT FLOWS TO THE STORM DRAIN SYSTEM VIA SPRINKLERS, CAR WASHING, AND CONSTRUCTION ACTIVITY (SEE IMAGE 2 ABOVE). THESE ARE JUST A FEW WAYS THAT WATER CAN BE WASTED AND POLLUTED. NATIVE PLANTS TO THIS AREA OF CALIFORNIA WERE CHOSEN TO ATTRACT LOCAL BIRDS, INSECTS AND BUTTERFLIES. WATER THAT FALLS ONTO THE SURROUNDING LANDSCAPE ALSO GETS DIVERTED TO THE RETENTION AREA WITH PLANTS THAT CAN HANDLE EXCESS WATER IN THE SOIL. A RETENTION AREA CAN CATCH ANY TRASH (SEE IMAGE 4 ABOVE) AND HOLDS THE WATER WHILE ALLOWING IT TO SLOWLY PERCOLATE INTO THE SOIL INSTEAD OF BEING DIRECTED TO THE STORM DRAIN SYSTEM.
3. INCLUDE PHOTOGRAPH OF PREVIOUS SITE WHERE COMMERCIAL ENDEAVOR OCCURRED, LOCAL BIRDS AND INSECTS, NATIVE WETLAND PLANTS AND THEIR NAMES (USE PLANTING PLAN AS A GUIDE).

NOTES:

THIS CONCEPT IS INTENDED TO SHOW THE INTENT AND TO PROVIDE INSPIRATION TO THE CONTRACTOR'S ARTIST. CONTRACTOR TO PROVIDE HALF SCALE COLOR PROOFS FOR OWNER'S APPROVAL PRIOR TO FABRICATION.

6 LONG BEACH INTERPRETIVE SIGNAGE

SCALE:1" = 1"

32 4123-06

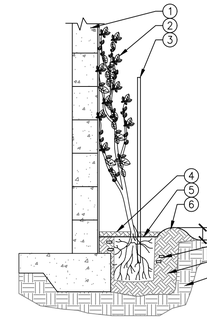

1. WALL, FENCE, BUILDING OR TRELLIS – PER PLAN.
2. VINE – PER PLAN.
3. REMOVE NURSERY STAKE FOR SELF-CLINGING VINES. LEAN STAKE AGAINST WALL.
4. MULCH – SEE PLANTING SCHEDULE.
5. ROOTBALL (SET CROWN 1" ABOVE FINISHED GRADE); SET AGAINST FOOTING.
6. COMPACTED WATERING BASIN. REMOVE PRIOR TO PROJECT TURNOVER.
7. FINISH GRADE
8. 7 GRAM GRO-POWER PLANTING TABLETS; 3-1 GAL, 6-5 GAL, 12-15 GAL, 16-24" BOX
9. COMPACTED BACKFILL MIX (PER PLANTING SPECIFICATIONS/REPORTS). 2X ROOTBALL WIDTH, 1.5X ROOTBALL DEPTH
10. UNDISTURBED NATIVE SOIL.

NOTES:

1. VINES MUST BE PLANTED ALONG ALL TRACT WALLS AT SPACING SHOWN ON PLAN.
2. PLACE VINE AS CLOSE AS POSSIBLE TO VERTICAL ELEMENT.
3. FOR NON-SELF-SECURING VINES, SECURE LEADER TO SUPPORT WITH GREEN NURSERY TAPE (USE EPOXY-TIE ON WALLS AND FENCES). SECURE ALL OTHER LENGTHY BRANCHES IN AN OUTWARD RADIAL PATTERN WITH ADDITIONAL GREEN NURSERY TAPE (OR EPOXY-TIES) AS NECESSARY TO DIRECT GROWTH. AFTER VINE IS ADEQUATELY SECURED, REMOVE NURSERY STAKE.
4. IF VINE IS TO BE PLACED TO GROW ONTO A TRELLIS, USE GREEN NURSERY TAPE TO SECURE TO THE TRELLIS.

5 VINE PLANTING ADJACENT TO WALL OR FENCE

SCALE:NTS

329333.23-02

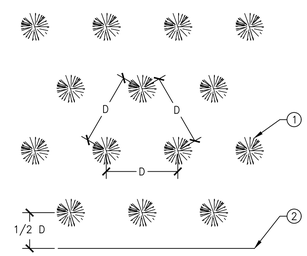

1. INDIVIDUAL PLANT (TYP.)
2. EDGE OF PAVING, WALK, TOE OR TOP OF SLOPE

NOTES:

1. "D" IS THE SPACING AS INDICATED IN THE LEGEND OR SPECIFICATIONS.
2. SEE LEGEND AND SPECIFICATIONS FOR SPACING AND ADDITIONAL NOTES.
3. FOR PLANT INSTALLATION, SEE DETAIL 1/PD-1

4 GROUND COVER / SHRUB TRIANGULAR SPACING

SCALE:NTS

329333.13-02

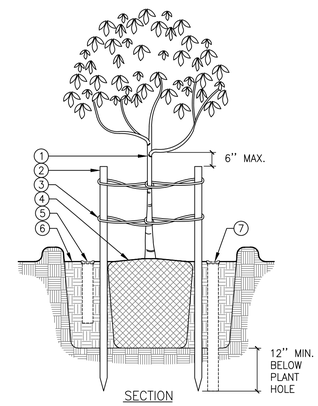

1. TIE SHOULD PROVIDE FLEXIBILITY OF TRUNK BUT NOT ALLOW RUBBING AGAINST THE STAKE.
2. REMOVE ALL NURSERY TRAINING STAKES.
3. CUT LODGEPOLES 6" BELOW CANOPY.
4. INSTALL 4" MIN. THICK MULCH LAYER WITHIN BASIN.
5. FOR DOUBLE STAKE, SET STAKES PERPENDICULAR TO WIND DIRECTION.
6. FOR PLANT INSTALLATION, SEE DETAIL 1/PD-1

1. TREE
2. LODGEPOLE PINE STAKE – LENGTH AS REQUIRED
3. MIN. (2) 18" TO 24" 'CINCH' TIES OR EQUAL PER STAKE – ATTACHED WITH GALVANIZED NAILS TO STAKE
4. ROOTBALL
5. ROOT WATERING SYSTEM (IF SHOWN OR SPECIFIED) 10/ID-2
6. PREPARED BACKFILL MIX
7. TREE FEEDER/AERATOR/DEWATERING TUBE (IF SHOWN OR SPECIFIED)

2 TREE STAKING

SCALE:NTS

329343.19-15

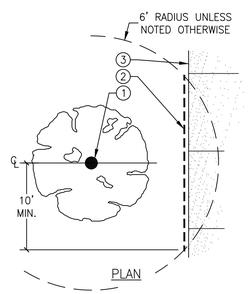

1. TREE TRUNK
2. ROOT BARRIER
3. HARDSCAPE– INCLUDES, BUT IS NOT LIMITED TO: SIDEWALKS, DRIVEWAYS, WALLS, MOW STRIPS, D.G. PATHS, ETC.

NOTES:

1. IF THE TREE IS WITHIN 6' OF HARDSCAPE A BARRIER SHALL BE USED.
2. THE ROOT BARRIER SHALL IN NO CASE COMPLETELY SURROUND THE ROOTBALL.
3. SEE SPECIFICATIONS OR PLAN FOR MFG. AND MODEL.

3 ROOT BARRIER - 6` CLEAR

SCALE:NTS

329456-01

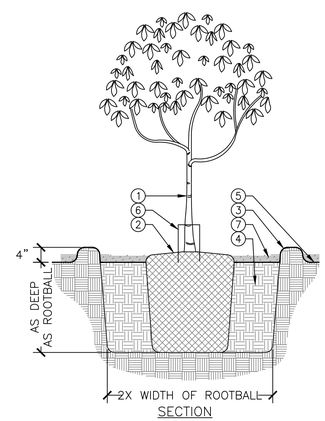

1. SHRUB OR TREE
2. ROOTBALL – SET 2" ABOVE BACKFILL
3. TEMPORARY COMPACTED EARTH BERM; OMIT IN TURF AREAS. SEE NOTE 2.
4. PREPARED BACKFILL MIX
5. FINISH GRADE
6. DEEPROOT ARBOR GUARD IN TURF AREAS
7. MULCH – SEE PLANTING SCHEDULE FOR TYPE AND DEPTH

NOTES:

1. SEE SPECIFICATIONS FOR BACKFILL MIX.
2. COMPACTED EARTH BERM SHALL BE RAKED SMOOTH AFTER INITIAL DEEP IRRIGATION.

1 TREE OR SHRUB PLANTING

SCALE:NTS

329333.13-01

FN:01664L-5011PD
DATE: 5/2/19
XXX
PLOT SCALE: 1=1

No.	DATE	SHEET	APPROVAL	DESCRIPTION

REVISIONS

REF. X-XXXX

AS-BUILT:

DESIGNED BY: KM & SC
DRAWN BY: KM & SC
DESIGN CHECK BY:
DRAFTING CHECK BY:

REGISTERED LANDSCAPE ARCHITECT
No. 4053
A. Stevens Cook III
EXP. 10-31-21
STATE OF CALIFORNIA

Long Beach Municipal Urban Stormwater Treatment - Wetlands

LANDSCAPE PLANTING DETAILS

GRAPHIC SCALE 0 1 2 3

PAGE X.X.X.

FIELD BOOK X.X.X.

JOB NO. 224501187

NO. R-

SHEET 19 OF 26

DRAWING NO. PD-1

Stantec

Stantec Consulting Ltd.
38 Technology Drive
Irvine, Ca.
92618-5312
Tel. 949.923.6000
Fax. 949.923.6121
www.stantec.com

LAST SAVED BY: kmcnguyen
PLOT DATE: Oct. 15, 20 SAVED PATH: C:\pwworkdir\d0539316

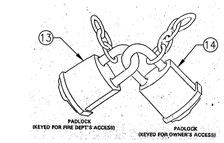

CHAIN AND PADLOCKS

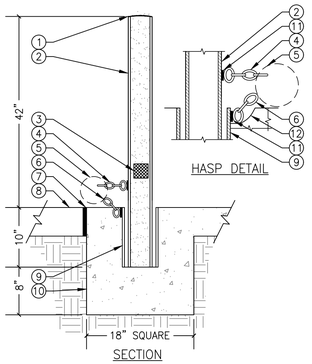

SECTION

HASP DETAIL

1. 1/4" STEEL PLATE WELDED TO TOP AND BURS REMOVED
2. 4" DIAMETER STEEL PIPE
3. KNOX DECAL #1001 – ONE EACH SIDE (2/BOLLARD)
4. FOUR LINKS
5. 3/8" CHAIN & PADLOCKS KNOX PADLOCK #3753– SEE INSET
6. THREE LINKS
7. 1/2" EXPANSION JOINT
8. BACK OF CURB OR JOINT IN WALK
9. 5" DIAMETER STEEL PIPE SLEEVE
10. CONCRETE TO BE SAME AS WALK
11. 1/8" DIAMETER WELD
12. MAKE BOWL SHAPED RECESS IN CONCRETE TO ACCOMMODATE THREE LINKS OF CHAIN
13. PADLOCK KNOX LOCK/KEYED FOR FIRE AND POLICE DEPARTMENT'S ACCESS
14. PADLOCK KEYED FOR OWNER'S (OR HOA) ACCESS

NOTES:
1. CHAIN TO BE 1/4" PROOF COIL CHAIN GALVANIZED STEEL. WELD FOUR LINKS TO PIPE SLEEVE.
2. ALL METAL TO BE HOT–DIP GALVANIZED AFTER FABRICATION.
3. PROVIDE KNOX LOCK BOX AND CHAIN.

10 DEMOUNTABLE BOLLARD POST

SCALE:NTS

WITH KNOX LOCKS
323133–01

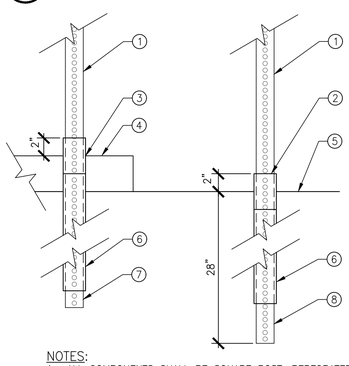

1. 2" SQ. METAL SIGN POST.
2. TOP OF ANCHOR AND SLEEVE.
3. FOR SIDEWALK INSTALLATION, DRILL SIDEWALK WITH A 3" HOLE, THE CENTER TO BE 6" MINIMUM FROM EDGE OF SIDEWALK.
4. FINISH GRADE (TOP OF SIDEWALK).
5. FINISH GRADE (IN PLANTER AREA).
6. 2–1/2" X 18" SLEEVE.
7. 2–1/4" X 18" ANCHOR.
8. 2–1/4" X 30" ANCHOR.

NOTES:
1. ALL COMPONENTS SHALL BE SQUARE POST, PERFORATED ON ALL FOUR SIDES.
2. ATTACH ANCHOR AND SLEEVE TOGETHER PRIOR TO DRIVING INTO GROUND. LEAVE AT LEAST ONE HOLE, BUT NO MORE THAN TWO, ABOVE GROUND OR ABOVE SIDEWALK.
3. ATTACH POST TO ANCHORING SYSTEM BY USING AT LEAST TWO 3/8" DIA. DRIVE RIVETS.
4. PROVIDE 4" MINIMUM LAP BETWEEN POST AND THE ANCHOR/SLEEVE ASSEMBLY.
5. PROVIDE TWO SUPPORT POSTS WHERE SHOWN.

9 SIGN POST INSTALLATION

SCALE:1 1/2" = 1'-0"

324123–02

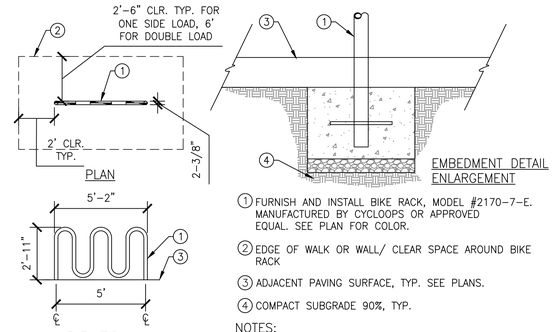

1. FURNISH AND INSTALL BIKE RACK, MODEL #2170–7–E. MANUFACTURED BY CYCLOOPS OR APPROVED EQUAL. SEE PLAN FOR COLOR.
2. EDGE OF WALK OR WALL/ CLEAR SPACE AROUND BIKE RACK
3. ADJACENT PAVING SURFACE, TYP. SEE PLANS.
4. COMPACT SUBGRADE 90%, TYP.

NOTES:
INSTALL BIKE RACK, CONCRETE FOOTING, AND REINFORCING PER CURRENT MANUFACTURER'S SPECIFICATIONS.

7 BIKE RACK

SCALE:NTS

129313–02

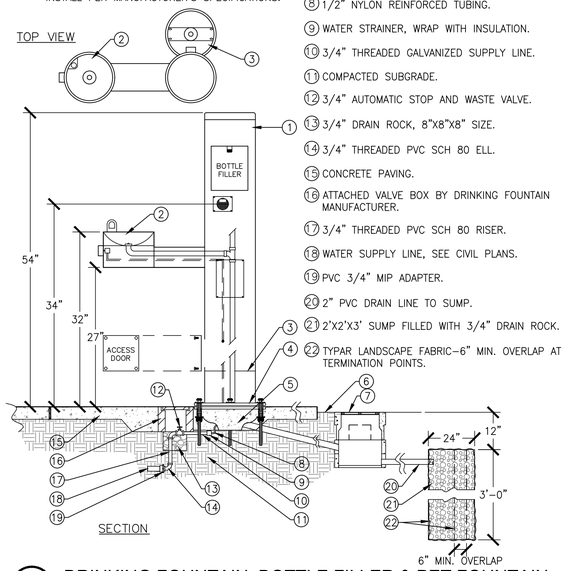

1. DRINKING FOUNTAIN WITH PET BOWL AND BOTTLE FILLER, SEE PLAN.
2. ACCESSIBLE DRINKING FOUNTAIN BASIN.
3. PET FOUNTAIN.
4. STAINLESS STEEL SURFACE CARRIER, INSTALL PER MANUFACTURER'S SPECIFICATIONS.
5. THICKENED PAVEMENT UNDER FOUNTAIN.
6. FINISH GRADE.
7. CLEAN–OUT. PLACE TO GRADE. TWO STANDARD STACKING TYPE ELECTRICAL BOXES W/ COVER AND CONCRETE BOTTOM, "CHRISTY" OR EQUAL.
8. 1/2" NYLON REINFORCED TUBING.
9. WATER STRAINER, WRAP WITH INSULATION.
10. 3/4" THREADED GALVANIZED SUPPLY LINE.
11. COMPACTED SUBGRADE.
12. 3/4" AUTOMATIC STOP AND WASTE VALVE.
13. 3/4" DRAIN ROCK, 8"X8"X8" SIZE.
14. 3/4" THREADED PVC SCH 80 ELL.
15. CONCRETE PAVING.
16. ATTACHED VALVE BOX BY DRINKING FOUNTAIN MANUFACTURER.
17. 3/4" THREADED PVC SCH 80 RISER.
18. WATER SUPPLY LINE, SEE CIVIL PLANS.
19. PVC 3/4" MIP ADAPTER.
20. 2" PVC DRAIN LINE TO SUMP.
21. 2'X2'X3' SUMP FILLED WITH 3/4" DRAIN ROCK.
22. TYPAR LANDSCAPE FABRIC–6" MIN. OVERLAP AT TERMINATION POINTS.

6 DRINKING FOUNTAIN, BOTTLE FILLER & PET FOUNTAIN

SCALE:1" = 1'-0"

WITH SUMP
224719–01

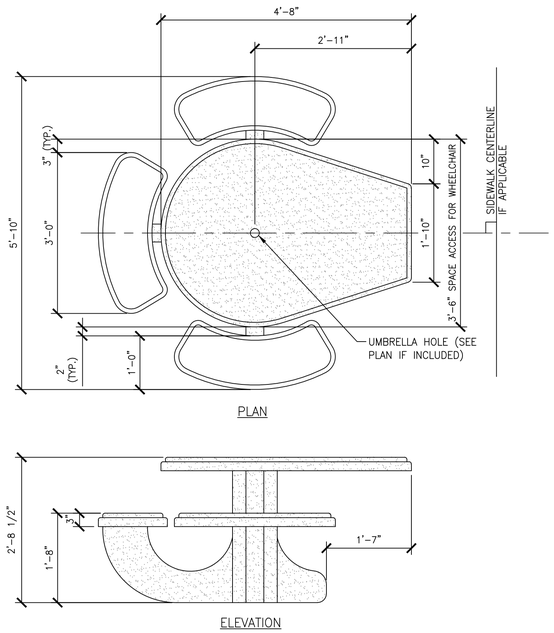

4 ROUND TABLE, ADA - QCP

SCALE:3/4" = 1'-0"

129343.13–05

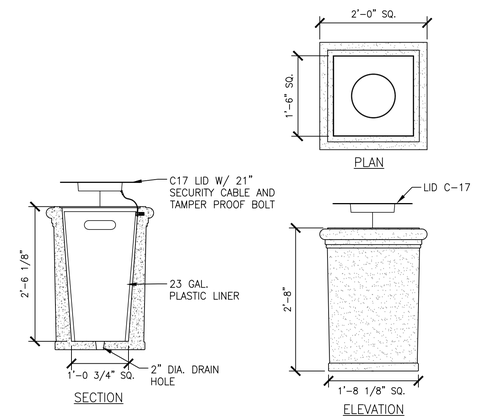

2 WASTE CONTAINER (SQUARE) - QCP

SCALE:3/4" = 1'-0"

129323–02

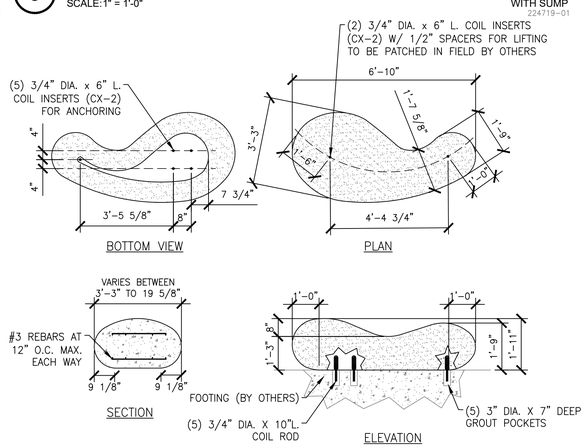

5 THE BOG (SEATING) - QCP

SCALE:3/8" = 1'-0"

129343.13–03

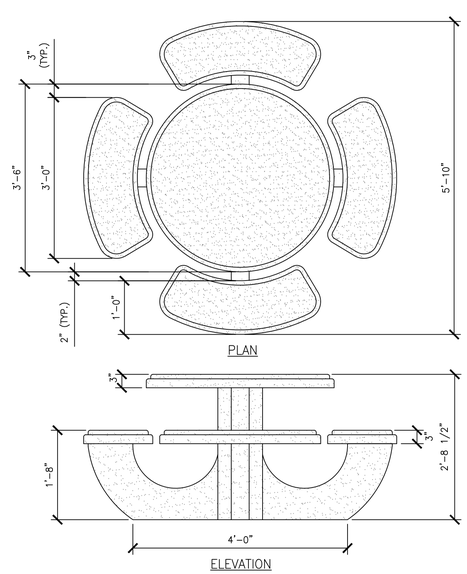

3 ROUND TABLE - QCP

SCALE:3/4" = 1'-0"

129343.13–04

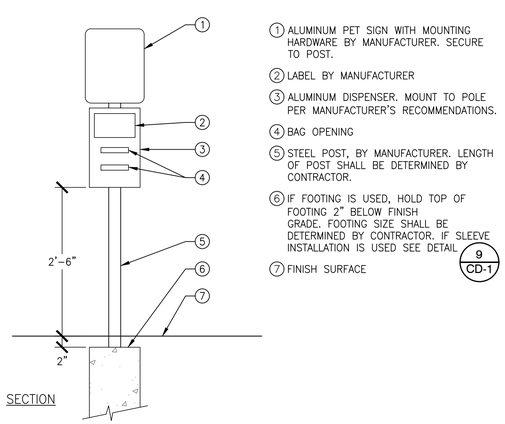

1. ALUMINUM PET SIGN WITH MOUNTING HARDWARE BY MANUFACTURER. SECURE TO POST.
2. LABEL BY MANUFACTURER
3. ALUMINUM DISPENSER. MOUNT TO POLE PER MANUFACTURER'S RECOMMENDATIONS.
4. BAG OPENING
5. STEEL POST, BY MANUFACTURER. LENGTH OF POST SHALL BE DETERMINED BY CONTRACTOR.
6. IF FOOTING IS USED, HOLD TOP OF FOOTING 2" BELOW FINISH GRADE. FOOTING SIZE SHALL BE DETERMINED BY CONTRACTOR. IF SLEEVE INSTALLATION IS USED SEE DETAIL 9/CD-1
7. FINISH SURFACE

8 DOG WASTE BAG STATION

SCALE:1" = 1"

324123–03

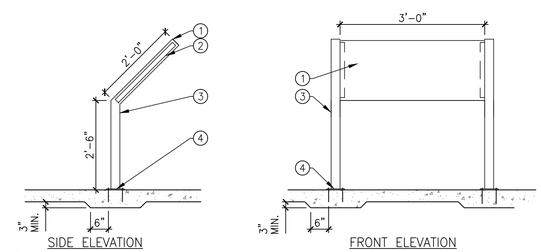

1. 24"X36"X1" CUSTOM GRAPHICS PANEL – SEE SPECIFICATIONS. ATTACH TO SUPPORTS W/MFR PROVIDED SST TAMPER RESISTANT SCREWS. FOR IMAGE SEE DETAIL 6/PD-1
2. 1/8" THICK EMBEDDED FIBERGLASS PANEL WITH 1/8" THICK FLEX GLASS
3. TUBULAR STEEL CANTILEVER SUPPORTS, 2x2x14 GA., A513 SQUARE STEEL TUBE, HOT DIPPED GALVANIZED, PRIMERED AND POLY–COATED BLUE PAINT – SURFACE MOUNTED – PROVIDE SAMPLE FOR REVIEW.
4. (4) 5/8" SST HILTI KB3 ANCHORS W/ 4" MIN. EMBED AT EACH POST.

1 INTERPRETIVE SIGNAGE

SCALE:NTS

324123–01
FN:01664L–5011CD
DATE: 5/2/19
XXX
PLOT SCALE: 1=1

LAST SAVED BY: kmcnguyen
PLOT DATE: Oct. 15, 20 SAVED PATH: C:\pwworkdir\d0539316

No.	DATE	SHEET	APPROVAL	DESCRIPTION

REVISIONS

REF. X–XXXX

AS–BUILT:

DESIGNED BY: KM & SC
DRAWN BY: KM & SC
DESIGN CHECK BY:
DRAFTING CHECK BY:

REGISTERED LANDSCAPE ARCHITECT
No. 4053
A. Stevens Cook II
EXP. 10-31-21
STATE OF CALIFORNIA

Long Beach Municipal Urban Stormwater Treatment - Wetlands

LANDSCAPE CONSTRUCTION DETAILS

GRAPHIC SCALE 0 1 2 3

PAGE X.X.X.

FIELD BOOK X.X.X.

JOB NO. 224501187

NO. R–

SHEET 20 OF 26

DRAWING NO. CD–1

Stantec
Stantec Consulting Ltd.
38 Technology Drive
Irvine, Ca.
92618–5312
Tel. 949.923.6000
Fax. 949.923.6121
www.stantec.com

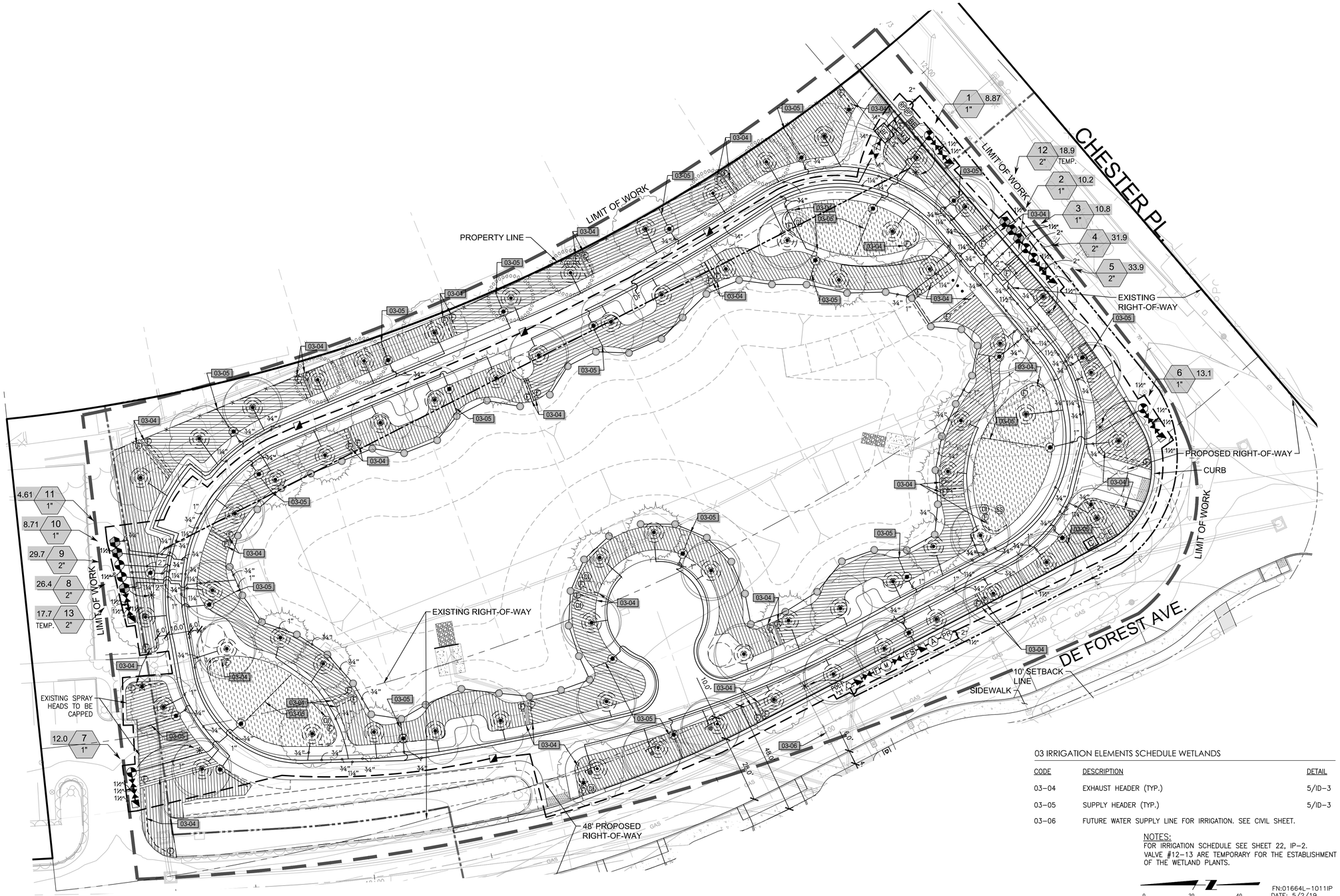

03 IRRIGATION ELEMENTS SCHEDULE WETLANDS

CODE	DESCRIPTION	DETAIL
03-04	EXHAUST HEADER (TYP.)	5/ID-3
03-05	SUPPLY HEADER (TYP.)	5/ID-3
03-06	FUTURE WATER SUPPLY LINE FOR IRRIGATION. SEE CIVIL SHEET.	

NOTES:
FOR IRRIGATION SCHEDULE SEE SHEET 22, IP-2.
VALVE #12-13 ARE TEMPORARY FOR THE ESTABLISHMENT OF THE WETLAND PLANTS.

0 20 40 Feet

FN:01664L-1011IP
DATE: 5/2/19
XXX
PLOT SCALE: 1=1

Stantec

Stantec Consulting Ltd.
38 Technology Drive
Irvine, Ca.
92618-5312
Tel. 949.923.6000
Fax. 949.923.6121
www.stantec.com

REVISIONS

No.	DATE	SHEET	APPROVAL	DESCRIPTION

AS-BUILT:

DESIGNED BY: KM & SC
DRAWN BY: KM & SC
DESIGN CHECK BY:
DRAFTING CHECK BY:

REGISTERED LANDSCAPE ARCHITECT
No. 4053
A. Stevens Cook II
EXP. 10-31-21
STATE OF CALIFORNIA

REF. X-XXXX

Long Beach Municipal Urban Stormwater Treatment - Wetlands

LANDSCAPE IRRIGATION PLAN

GRAPHIC SCALE 0 1 2 3

PAGE X.X.X.

FIELD BOOK X.X.X.

JOB NO. 224501187

NO. R-

SHEET 21 OF 26

DRAWING NO. IP-1

LAST SAVED BY: kmcnguyen
PLOT DATE: Oct. 15, 20 SAVED PATH: C:\pwworkdir\d0539316

LEED V4 WATER USE

Baseline Calculation

Landscaped area (sq ft)	25,627

Table: Peak watering month

Determine the peak watering month at the project location by entering the monthly rainfall and evapotranspiration rate in the table below. The month with the highest watering demand is the peak watering month.

	Monthly Rainfall (in)	Monthly ETo (in)	Watering Demand (in)
January	2	2	0
February	0	2	2
March	0	3	3
April	0	4	4
May	0	5	4
June	0	4	4
July	0	5	5
August	0	5	5
September	0	4	4
October	0	3	3
November	0	2	2
December	0	2	1
Peak watering month			July
Peak watering demand (in)			5
Peak watering month ETo (in)			5
Landscape water allowance (gal/month)			59,261
Landscape water baseline (gal/month)			84,659

Landscape Water Requirement

Average monthly rainfall for the site's peak watering month (in/month)	0

Table: Landscape water requirement

Zone ID	Hydrozone or Landscape Feature Area (sq ft)	Plant Type or Landscape Feature	Water Requirement	Landscape Coefficient (K_L)	Irrigation Type	Distribution Uniformity (DU_{LQ})	LWR_m (gal/month)
1	1,800	Trees	Low	0.2	Fixed spray	65%	1830
2	19,827	Shrubs	Low	0.2	Drip (press comp)	90%	14555
3	4,000	Turfgrass	Medium	0.7	Rotor	70%	13214
							0
							0
							0
							0
							0
							0
							0
Total hydrozone or landscape feature area (sq ft)							25,627
Landscape water requirement based on the site's peak watering month (gal/month)							29,599

Summary

Note: All information on this tab is READ-ONLY. To edit, see previous tabs.

Landscape water baseline (gal/month)	84,659
Landscape water requirement (LWR) (gal/month)	29,599
Percentage reduction from baseline (%)	65%

CALIFORNIA MAWA & ETWU

Maximum Applied Water Allowance Calculations for New and Rehabilitated Non-Residential Landscapes

Enter value in Pale Blue Cells

Tan Cells Show Results

Messages and Warnings

Click on the blue cell on right to Pick City Name	Long Beach	Name of City
ET_o of City from Appendix A	39.70	ET_o (inches/year)
	4000	Overhead Landscape Area (ft^2)
	21627	Drip Landscape Area (ft^2)
		SLA (ft^2)
Total Landscape Area	25,627	
Results:		
$(ET_o) \times (0.62) \times [(0.45 \times LA) + (1.0 - 0.45) \times SLA)]$	-	Gallons
	-	Cubic Feet
	-	HCF
	-	Acre-feet
	-	Millions of Gallons
MAWA calculation incorporating Effective Precipitation (Optional)		
Precipitation (Optional)		
ET_o of City from Appendix A	40	ET_o (inches/year)
Total Landscape Area	25,627	LA (ft^2)
Special Landscape Area	0	SLA (ft^2)
	2	Total annual precipitiation (inches/year)
Enter Effective Precipitation	0.50	Eppt (in/yr)(25% of total annual precipitation)
Results:		
$MAWA = [(ET_o - Eppt) \times (0.62)] \times [(0.45 \times LA) + ((1.0 - 0.45) \times SLA)]$	280,277	Gallons
	37,467.76	Cubic Feet
	374.68	HCF
	0.86	Acre-feet
	0.28	Millions of Gallons

Estimated Total Water Use

Equation: $ETWU = ET_o \times 0.62 \times [((PF \times HA)/IE) + SLA]$; Considering precipitation $ETWA = (ETo-Eppt) \times 0.62 \times [((PF \times HA)/IE) + SLA]$

Enter values in Pale Blue Cells

Tan Cells Show Results

Messages and Warnings

Irrigation Efficiency Default Value for overhead 0.75 and drip 0.81.

Plant Water Use Type	Plant Factor
Very Low	0 - 0.1
Low	0.2 - 0.3
Medium	0.4 - 0.6
High	0.7 - 1.0
SLA	1.0

Hydrozone	Select System From the Dropdown List click on cell below	Plant Water Use Type (s) (low, medium, high)	Plant Factor (PF)	Hydrozone Area (HA) (ft^2) Without SLA	Enter Irrigation Efficiency (IE)	(PF x HA (ft^2))/IE
Zone 1	Overhead Spray	Medium	0.50	4,000	0.75	2,667
Zone 2	Drip	Low	0.20	21,627	0.81	5,340
						8,007
		SLA		0		0
			Sum	25,627		

Results

MAWA = 280,277

ETWU = 194,594 Gallons
26,014 Cubic Feet
260.14 HCF
0.60 Acre-feet
0.19 Millions of Gallons

ETWU complies with MAWA

CRITICAL ANALYSIS

Generated: 2020-10-14
11:13

P.O.C. NUMBER: 01
Water Source Information: Plant provided alternative water source for future connection.

FLOW AVAILABLE
Point of Connection Size: 2"
Flow Available: 78.62 gpm

PRESSURE AVAILABLE
Static Pressure at POC: 70.00 psi
Pressure Available: 70.00 psi

DESIGN ANALYSIS
Maximum Station Flow: 34.35 gpm
Flow Available at POC: 78.62 gpm
Residual Flow Available: 44.27 gpm

Critical Station: 12
Design Pressure: 40.00 psi
Friction Loss: 6.45 psi
Fittings Loss: 0.65 psi
Elevation Loss: 0.00 psi
Loss through Valve: 0.50 psi
Pressure Req. at Critical Station: 50.09 psi
Loss for Fittings: 0.00 psi
Loss for Main Line: 0.49 psi
Loss for POC to Valve Elevation: 0.00 psi
Loss for Backflow: 0.00 psi
Loss for Master Valve: 0.45 psi
Critical Station Pressure at POC: 51.03 psi
Pressure Available: 70.00 psi
Residual Pressure Available: 18.97 psi

P.O.C. NUMBER: 03
Water Source Information: Existing potable water meter for temporary irrigation use and permanent drinking fountain.

FLOW AVAILABLE
Water Meter Size: 1-1/2"
Flow Available: 46.59 gpm

PRESSURE AVAILABLE
Static Pressure at POC: 70.00 psi
Elevation Change: 5.00 ft
Service Line Size: 1 1/2"
Length of Service Line: 20.00 ft
Pressure Available: 67.00 psi

DESIGN ANALYSIS
Maximum Station Flow: 33.85 gpm
Flow Available at POC: 46.59 gpm
Residual Flow Available: 12.74 gpm

Critical Station: 12
Design Pressure: 40.00 psi
Friction Loss: 6.45 psi
Fittings Loss: 0.65 psi
Elevation Loss: 0.00 psi
Loss through Valve: 0.50 psi
Pressure Req. at Critical Station: 47.60 psi
Loss for Fittings: 0.00 psi
Loss for Main Line: 3.05 psi
Loss for POC to Valve Elevation: 0.00 psi
Loss for Backflow: 10.20 psi
Loss for Master Valve: 0.45 psi
Loss for Water Meter: 0.73 psi
Critical Station Pressure at POC: 62.03 psi
Pressure Available: 67.00 psi
Residual Pressure Available: 4.97 psi

IRRIGATION SCHEDULE

SYMBOL	MANUFACTURER/MODEL/DESCRIPTION	QTY	DETAIL
	RAIN BIRD R-VAN14 1812-P45 SHRUB ROTARY, 8'-14' 45Å°-270Å° AND 360Å° HAND ADJUSTABLE MULTI-STREAM ROTARY W/1800 SHRUB SPRAY BODY ON 12.0" POP-UP WITH 1800-NP PURPLE CAP TO IDENTIFY RECYCLED WATER. 45 PSI IN-STEM PRESSURE REGULATOR. 1/2" NPT FEMALE THREADED INLET.	63	9/ID-2

SYMBOL	MANUFACTURER/MODEL/DESCRIPTION	QTY	DETAIL
	PIPE TRANSITION POINT ABOVE GRADE PIPE TRANSITION POINT FROM PVC LATERAL TO DRIP TUBING WITH RISER TO SUBSURFACE INSTALLATION.	26	2/ID-3
	MANUAL FLUSH VALVE NETAFIM VALVE #TLSOV 1/2" MALE PIPE THREAD.	51	7/ID-3
DI	DRIP INDICATOR RAIN BIRD OPERIND- STEM RISES 6" FOR CLEAR VISIBILITY WHEN DRIP SYSTEM IS CHARGED TO A MINIMUM OF 20PSI. INCLUDES 16" OF 1/4" DISTRIBUTION TUBING WITH CONNECTION FITTING PRE-INSTALLED.	7	6/ID-3
	SUBSURFACE DRIPLINE AROUND TREE- 9' DIAMETER NETAFIM TECHLINE TLHCVXR-053-12- PRESSURE COMPENSATING WITH CHECK VALVE AND ANTI-SIPHON FEATURE. 0.53 GPH EMITTERS AT 12" O.C. FIRST RING 3' DIAMETER CENTERED AT TREE TRUNK. OTHER RING(S) SET IN CONCENTRIC CIRCLES 18" APART.	67	9/ID-3
	AREA TO RECEIVE DRIPLINE SUBSURFACE LANDSCAPE DRIPLINE NETAFIM TLHCVXR-053-18-NP TECHLINE HCVXR PRESSURE COMPENSATING WITH CHECK VALVE AND ANTI-SIPHON FEATURE. TO BE INSTALLED SUBSURFACE. FOR RECLAIMED WATER ONLY. 0.53 GPH EMITTERS AT 18" O.C. DRIPLINE LATERALS SPACED AT 12" APART, WITH EMITTERS OFFSET FOR TRIANGULAR PATTERN. 17MM. LOCATE BETWEEN 3" AND 4" BELOW FINISHED GRADE.	20,678 L.F.	5/ID-3
	AREA TO RECEIVE DRIPLINE SUBSURFACE TURF LANDSCAPE DRIPLINE NETAFIM TLHOVXR-053-12-NP TECHLINE HCVXR PRESSURE COMPENSATING WITH CHECK VALVE AND ANTI-SIPHON FEATURE. FOR RECLAIMED WATER ONLY. 0.53 GPH EMITTERS AT 12" O.C. DRIPLINE LATERALS SPACED AT 12" APART, WITH EMITTERS OFFSET FOR TRIANGULAR PATTERN. 17MM. LOCATE BETWEEN 2-1/2" AND 3-1/2" BELOW FINISHED GRADE.	3,859 L.F.	5/ID-3

SYMBOL	MANUFACTURER/MODEL/DESCRIPTION	QTY	DETAIL
	BRASS CONTROL VALVE, FILTER & PRESSURE REGULATOR RAIN BIRD EFB-CP-1", 1-1/2", 2", THAT IS CONTAMINATION PROOF W/SELF-FLUSHING FILTER SCREEN. GLOBE CONFIGURATION, PURPLE HANDLE COVER FOR NON-POTABLE WATER USE. ADD/INSTALL RAIN BIRD PRB-QKCHK-100 FILTER AND PRESSURE REGULATOR PER DETAIL.	7	1/ID-3
	BRASS REMOTE CONTROL VALVE RAIN BIRD EFB-CP-1", 1-1/2", 2" THAT IS CONTAMINATION PROOF W/SELF-FLUSHING FILTER SCREEN. GLOBE CONFIGURATION, PURPLE HANDLE COVER FOR NON-POTABLE WATER USE.	6	7/ID-2
	QUICK COUPLING VALVE RAIN BIRD 44-NP ACME - 1" BRASS QUICK-COUPLING VALVE, WITH CORROSION-RESISTANT STAINLESS STEEL SPRING, LOCKING NON-POTABLE PURPLE RUBBER COVER, AND 2-PIECE BODY, ACME THREAD .	11	6/ID-1
	SHUT-OFF VALVE LASCO FITTINGS SUPER C - SC SERIES - 1", 1-1/2", 2", AND 3" PLASTIC FULL BLOCK TRUE UNION BALL VALVE. SHUT OFF/ISOLATION VALVE TO MINIMIZE THE POTENTIAL OF WATER HAMMER. SUPER "C" COMPACT VALVE. INSTALL SAME SIZE AS MAINLINE.	13	6/ID-2
M	NORMALLY CLOSED BRASS MASTER VALVE 1-1/2" BUCKNER-SUPERIOR 3200-RW PROVIDES DIRTY WATER PROTECTION AND NO MINIMUM FLOW FEATURE. PURPLE CROSS HANDLE FOR RECLAIMED WATER USE.	1	3/ID-2
A	PRESSURE AIR RELEASE VALVE BERMAD # 01-ARA 1"	1	1/ID-2
	PRESSURE REDUCING VALVE WILKINS 500XL. SIZE PER LINE SIZE.	1	7/ID-1
	PRESSURE REDUCING VALVE INSTALLED IN BOX PRESSURE LIMITED TO 57.70 PSI WILKINS #500XL. SIZE PER LINE SIZE.	1	3/ID-1
BF	BACKFLOW PREVENTER 3/4" APOLLO VALVES 4ALF204A2F, REDUCED PRESSURE PRINCIPLE, LEAD FREE, INLET SIZE 3/4" WITH BALL VALVES AND SAE TESTCOCKS	1	7/ID-1
RP BP	TEMPORARY BACKFLOW PREVENTER APOLLO VALVES 4ALF207A2F, REDUCED PRESSURE PRINCIPLE, LEAD FREE, INLET SIZE 1-1/2" WITH BALL VALVES AND SAE TESTCOCKS	1	7/ID-1
C	IRRIGATION CONTROLLER ASSEMBLY IMPERIAL TECHNICAL SERVICE MODEL NO.ICA5-CS1-16/CS-GR/GR-STUBBY/COMM 5YR/C3-2WIRE-OPT/CS-2W-MOIST/FMXX/INTMTIC-ET2845; METERED ENCLOSURE WITH A CALSENSE 16-STATION BASE MODEL CS3000, STUBBY ANTENNA, SUPPORT FOR A SINGLE CONVENTIONALLY WIRED POINT OF CONNECTION, TRANSIENT PROTECTION, AND FIELD-REPLACEABLE MODULES. SUPPORTS UP TO 48 CONVENTIONALLY-WIRED STATIONS WITH ADDITIONAL 8-STATION MODULES. CELLULAR MODEM FOR CS3000 TO PROVIDE COMMUNICATION WITH CLOUD-BASED COMMAND CENTER ONLINE WEB APPLICATION. 5-YEAR PREPAID DATA PLAN FOR 1-CELLULAR MODEM COMMUNICATING WITH 1 OR 2 CELLULAR STUBBY SURFACE-MOUNT ANTENNAE WITH 3-FT. ANTENNA CABLE. IN ADDITION, AN INTERMATIC MODEL ET2845 LIGHTING CONTROL TIMER SHALL BE PRE-MOUNTED AND WIRED TO 120V. CONNECTION. LIGHTING CONTRACTOR SHALL BE RESPONSIBLE FOR ALL WIRING REQUIRED FOR LIGHTING CIRCUITS AS NOTED IN THE ELECTRICAL PLAN.	1	1/ID-1

IRRIGATION SCHEDULE CONTINUED

SYMBOL	MANUFACTURER/MODEL/DESCRIPTION	QTY	DETAIL
SS	SOIL MOISTURE SENSOR LOCATE CALSENSE CS-2W-MOIST- LOCATE 5' AWAY FROM LAWN EDGE PER MANUFACTURERS RECOMMENDATIONS. DIMENSION ON AS-BUILT DRAWINGS. 2 WIRE SHALL BE PLACED IN GREY ELECTRICAL CONDUIT FROM SENSOR TO CONTROLLER. LOCATE DECODER IN CONTROLLER ENCLOSURE. PLACE ONE DISK MAGNET WITH 2 LB. MIN. HOLDING FORCE IN A SCH 80 CLOSE-END NIPPLE. TEFLON TAPE AND CAP BOTH ENDS IF NIPPLE AND PLACE. TAPE NIPPLE TO SENSOR WIRES DIRECTLY ADJACENT TO SENSOR. CONNECT SENSOR TO ALL LAWN VALVE TERMINALS IN THE CONTROLLER. ALL WIRE TO BE PAIGE CABLE P-7354-D OR HUNTER REGENCY CABLE IN CONDUIT. ALL WIRE CONNECTIONS SHALL BE MADE WITH 3M SCOTCH CAST 3570G-N CONNECTORS WITH WIRE NUT ONLY.	1	
FS	FLOW SENSOR CALSENSE FM-1B WITH 14 AWG IN GREY ELECTRICAL CONDUIT BETWEEN THE FLOW METER AND THE CONTROLLER.	1	2/ID-2
F	BASKET FILTER RAIN BIRD PRB-QKCHK-100-100M - 100 MESH STAINLESS STEEL SCREEN.	1	
	BACKFLOW ENCLOSURE V.I.T. PRODUCTS SBBC-22SS, LOW PROFILE, TUBE AND WIRE CONSTRUCTION SMOOTH TOUCH SURFACE, STAINLESS STEEL. 23.5"L, 28"H, 17.75"W (59.69CM L, 71.12CM H, 45.085CM W).	1	8/ID-1
E	ELECTRICAL METER PEDESTAL ADDRESS _____	1	
BE	TEMPORARY BACKFLOW ENCLOSURE V.I.T. PRODUCTS SBBC-40CR, HIGH PROFILE, TUBE AND WIRE CONSTRUCTION SMOOTH TOUCH SURFACE, COLD ROLLED STEEL, 40"L, 39"H, 25.5"W (101.6CM L, 99.06CM H, 64.77CM W).	1	8/ID-1
	ACTUAL LOCATION OF IRRIGATION EQUIPMENT IRRIGATION EQUIPMENT TO BE LOCATED IN PLANTING AREA, NOT IN HARDSCAPE. MAINLINE TO BE LOCATED 4' FROM EDGE OF PAVEMENT ON THE OPPOSITE SIDE OF THE WETLAND. VALVES TO BE LOCATED 4'-6" FROM EDGE OF PAVEMENT.	1	
PR	PRESSURE RELIEF VALVE 3/4" WATTS 530C CALIBRATED PRESSURE RELIEF VALVE	1	1/ID-2
	RECYCLED WATER SIGN	4	11/ID-2
M3	WATER METER 1-1/2" EXISTING POTABLE WATER METER FOR TEMPORARY IRRIGATION USE AND PERMANENT DRINKING FOUNTAIN.	1	
POC1 #1	POINT OF CONNECTION 2" PLANT PROVIDED ALTERNATIVE WATER SOURCE FOR FUTURE CONNECTION.	1	
	IRRIGATION LATERAL LINE: PVC CLASS 315 SDR 13.5-NP UP TO 1-1/2" PIPE SHALL BE SCH 40 PVC. PIPE 2" AND LARGER SHALL BE CL. 315 PVC.	5,905 L.F.	4/ID-1
	IRRIGATION MAINLINE: PVC CLASS 315 SDR 13.5-NP MAINLINE: LOCATE 24" BELOW GRADE. UP TO 1-1/2" PIPE SHALL BE SCH 40 PVC. PIPE 2" AND LARGER SHALL BE CL. 315 PVC. INCLUDE CRISTY'S 3" BLUE - NON-POTABLE WATER MARKING TAPE PER DETAIL.	1,469 L.F.	4/ID-1
	IRRIGATION MAINLINE: PVC CLASS 315 SDR 13.5 TEMPORARY MAINLINE: LOCATE 24" BELOW GRADE. UP TO 1-1/2" PIPE SHALL BE SCH 40 PVC. PIPE 2" AND LARGER SHALL BE CL. 315 PVC. INCLUDE CRISTY'S 3" BLUE - NON-POTABLE WATER MARKING TAPE PER DETAIL.	379.7 L.F.	4/ID-1
	IRRIGATION MAINLINE: TYPE K COPPER PIPE TO DRINKING FOUNTAIN-MAINLINE: LOCATE 24" BELOW GRADE. INCLUDE CRISTY'S 2" BLUE - POTABLE WATER MARKING TAPE PER DETAIL.	151.3 L.F.	4/ID-1
	PIPE SLEEVE: PVC SCHEDULE 40 TYPICAL PIPE SLEEVE FOR IRRIGATION PIPE. PIPE SLEEVE SIZE SHALL ALLOW FOR IRRIGATION PIPING AND THERE RELATED COUPLINGS TO EASILY SLIDE THROUGH SLEEVING MATERIAL. EXTEND SLEEVES 18 INCHES BEYOND EDGES OF PAVING OR CONSTRUCTION.	114.5 L.F.	4/ID-1

VALVE CALLOUT

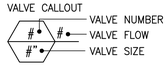

IRRIGATION NOTES:

1. THE IRRIGATION SYSTEM IS SHOWN SCHEMATICALLY FOR PURPOSES OF DRAWING CLARITY. THE CONTRACTOR SHALL EVALUATE THE FIELD CONDITIONS AND CONSIDER THE DESIGNERS INTENT. IF THE INTENT IS NOT CLEAR, IT IS THE RESPONSIBILITY OF THE CONTRACTOR TO CONTACT THE OWNER'S REPRESENTATIVE TO ALLOW FOR CLARIFICATION.
2. DUE TO THE SCHEMATIC NATURE OF THE DESIGN, IMPROVEMENTS MAY APPEAR TO BE LOCATED IN PAVEMENT. UNDER NO CIRCUMSTANCES SHOULD ANY IMPROVEMENTS OTHER THAN PIPE OR WIRE IN SLEEVES BE LOCATED IN OR UNDER PAVEMENT. FURTHER, PIPE SHALL NOT CHANGE DIRECTIONS UNDER PAVEMENT. ONLY COUPLINGS MAY BE USED TO EXTEND PIPE LENGTH, NOT CHANGE DIRECTION.
3. ANY QUANTITIES SHOWN ON THE PLAN ARE FOR THE CONVENIENCE OF THE CONTRACTOR. THE CONTRACTOR IS TO VERIFY THE COUNTS TO ENSURE THAT THE JOB WILL BE BID TO COVER THE COMPLETE INSTALLATION.
4. SPRINKLER HEAD LAYOUT SHALL BE INSTALLED TO PREVENT OVERSPRAY ONTO PAVEMENT. MIXING OF HEAD TYPES (FOR INSTANCE MIXING SPRAY HEADS WITH BUBBLERS OR ROTARY HEADS) IS NOT ACCEPTABLE. THE SPRINKLER LAYOUT SHALL BE OF UNIFORM DISTRIBUTION.

FN:01664L-1012IP
DATE: 5/2/19
XXX
PLOT SCALE: 1=1

Stantec
Stantec Consulting Ltd.
38 Technology Drive
Irvine, Ca.
92618-5312
Tel. 949.923.6000
Fax. 949.923.6121
www.stantec.com

No.	DATE	SHEET	APPROVAL	DESCRIPTION

REVISIONS

AS-BUILT:

REF. X-XXXX

DESIGNED BY: KM & SC
DRAWN BY: KM & SC
DESIGN CHECK BY:
DRAFTING CHECK BY:

REGISTERED LANDSCAPE ARCHITECT
No. 4053
A. Stevens Cook III
EXP. 10-31-21
STATE OF CALIFORNIA

Long Beach Municipal Urban Stormwater Treatment - Wetlands

LANDSCAPE IRRIGATION SCHEDULE & NOTES

GRAPHIC SCALE 0 1 2 3

PAGE X.X.X.

FIELD BOOK X.X.X.

JOB NO. 224501187

NO. R-

SHEET 22 OF 26

DRAWING NO. IP-2

LAST SAVED BY: kmanguyen
PLOT DATE: Oct. 15, 20 SAVED PATH: C:\pwworkdir\d0539316

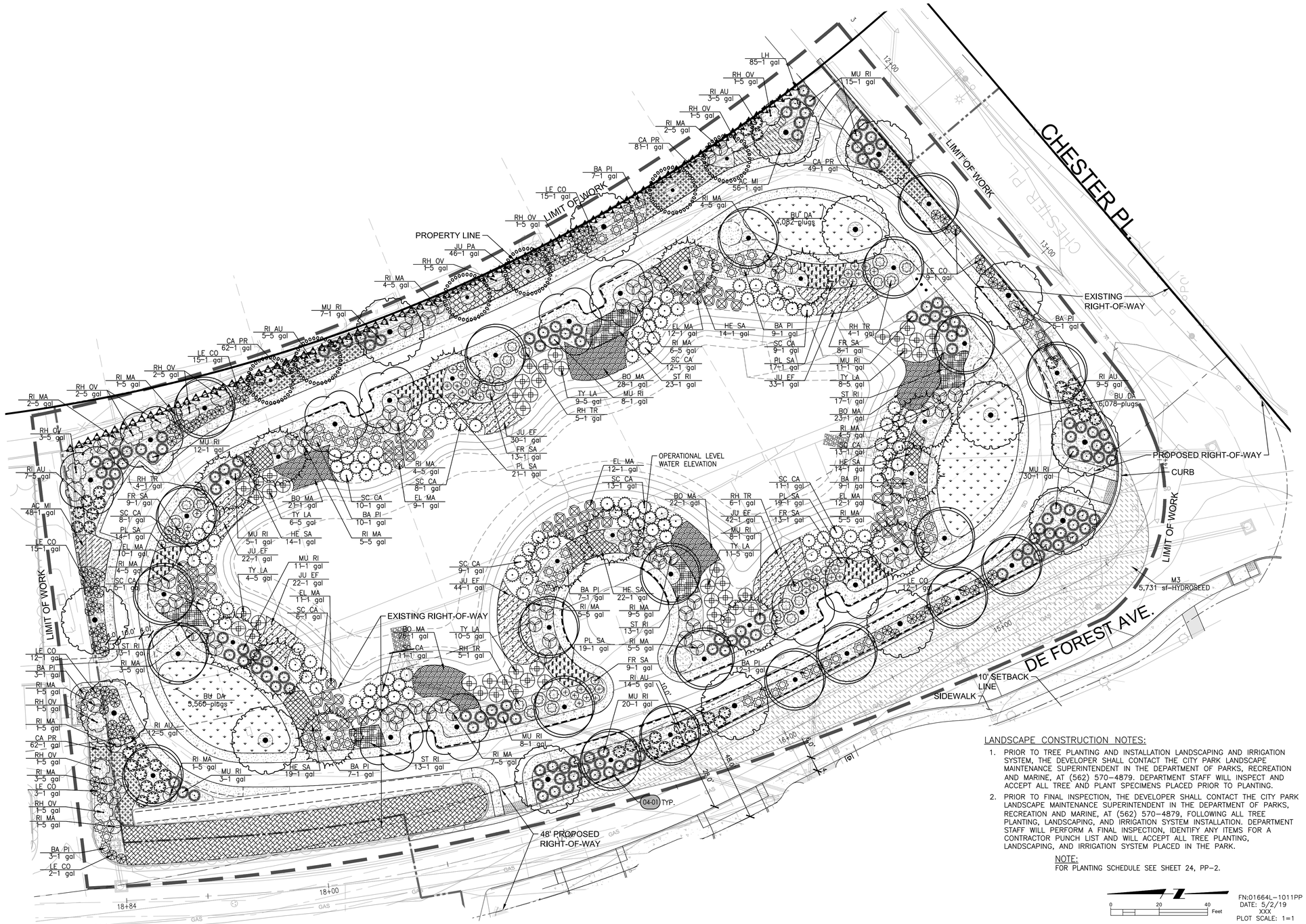

LANDSCAPE CONSTRUCTION NOTES:

1. PRIOR TO TREE PLANTING AND INSTALLATION LANDSCAPING AND IRRIGATION SYSTEM, THE DEVELOPER SHALL CONTACT THE CITY PARK LANDSCAPE MAINTENANCE SUPERINTENDENT IN THE DEPARTMENT OF PARKS, RECREATION AND MARINE, AT (562) 570-4879. DEPARTMENT STAFF WILL INSPECT AND ACCEPT ALL TREE AND PLANT SPECIMENS PLACED PRIOR TO PLANTING.
2. PRIOR TO FINAL INSPECTION, THE DEVELOPER SHALL CONTACT THE CITY PARK LANDSCAPE MAINTENANCE SUPERINTENDENT IN THE DEPARTMENT OF PARKS, RECREATION AND MARINE, AT (562) 570-4879, FOLLOWING ALL TREE PLANTING, LANDSCAPING, AND IRRIGATION SYSTEM INSTALLATION. DEPARTMENT STAFF WILL PERFORM A FINAL INSPECTION, IDENTIFY ANY ITEMS FOR A CONTRACTOR PUNCH LIST AND WILL ACCEPT ALL TREE PLANTING, LANDSCAPING, AND IRRIGATION SYSTEM PLACED IN THE PARK.

NOTE:
FOR PLANTING SCHEDULE SEE SHEET 24, PP-2.

0 20 40 Feet

FN:01664L-1011PP
DATE: 5/2/19
XXX
PLOT SCALE: 1=1

Stantec

Stantec Consulting Ltd.
38 Technology Drive
Irvine, Ca.
92618-5312
Tel. 949.923.6000
Fax. 949.923.6121
www.stantec.com

REVISIONS

No.	DATE	SHEET	APPROVAL	DESCRIPTION

AS-BUILT:

REF. X-XXXX

DESIGNED BY: KM & SC
DRAWN BY: KM & SC
DESIGN CHECK BY:
DRAFTING CHECK BY:

REGISTERED LANDSCAPE ARCHITECT
No. 4053
A. Stevens Cook II
EXP. 10-31-21
STATE OF CALIFORNIA

Long Beach Municipal Urban Stormwater Treatment - Wetlands

LANDSCAPE PLANTING PLAN

GRAPHIC SCALE 0 1 2 3

PAGE X.X.X.

FIELD BOOK X.X.X.

JOB NO. 224501187

NO. R-

SHEET 23 OF 26

DRAWING NO. PP-1

LAST SAVED BY: kmcnguyen
PLOT DATE: Oct. 15, 20 SAVED PATH: C:\pwworkdir\d0539316

PLANT SCHEDULE WETLANDS

TREES	CODE	BOTANICAL / COMMON NAME	CONT	SPACE	ZONE*	QTY	DETAIL
	PR IL	PRUNUS ILICIFOLIA ILICIFOLIA / HOLLYLEAF CHERRY	24"BOX	AS SHOWN	L/0.3	6	2/PD-1
	QU AG	QUERCUS AGRIFOLIA / COAST LIVE OAK	24"BOX	AS SHOWN	L/0.3	15	2/PD-1
	QU EN	QUERCUS ENGLEMANNII / ENGELMANN OAK	24"BOX	AS SHOWN	L/0.3	10	2/PD-1
	QU LO	QUERCUS LOBATA / VALLEY OAK	24"BOX	AS SHOWN	L/0.3	22	2/PD-1
	SA LA	SALIX LAEVIGATA / RED WILLOW STANDARD ONE TRUNK	24"BOX	AS SHOWN	L/0.3	14	2/PD-1

SHRUBS	CODE	BOTANICAL / COMMON NAME	CONT	SPACING	ZONE*	QTY	DETAIL
	BA PI	BACCHARIS PILULARIS / DWARF COYOTE BRUSH	1 GAL	5' O.C.	L/0.3	72	1/PD-1
	EL MA	ELEOCHARIS MACROSTACHYA / COMMON SPIKERUSH	1 GAL	4.5' O.C.	M/0.5	66	1/PD-1
	FR SA	FRANKENIA SALINA / ALKALI HEATH	1 GAL	3.5' O.C.	L/0.3	52	1/PD-1
	LE CO	LEYMUS CONDENSATUS / GIANT WILD RYE	1 GAL	4' O.C.	L/0.3	83	1/PD-1
	MU RI	MUHLENBERGIA RIGENS / DEER GRASS	1 GAL	5' O.C.	L/0.3	138	1/PD-1
	RH OV	RHUS OVATA / SUGAR BUSH	5 GAL	8' O.C.	L/0.3	14	1/PD-1
	RH TR	RHUS TRILOBATA / SKUNKBUSH SUMAC	1 GAL	6' O.C.	L/0.3	24	1/PD-1
	RI AU	RIBES AUREUM GRACILLIMUM / GOLDEN CURRANT	5 GAL	5' O.C.	L/0.3	50	1/PD-1
	RI MA	RIBES MALVACEUM / CHAPARRAL CURRANT	5 GAL	6' O.C.	L/0.3	77	1/PD-1
	SC CA	SCHOENOPLECTUS CALIFORNICUS / CALIFORNIA BULRUSH	1 GAL	6' O.C.	M/0.5	115	1/PD-1
	TY LA	TYPHA LATIFOLIA / BROAD LEAVED CATTAIL	5 GAL	6' O.C.	M/0.4	48	1/PD-1

VINE/ESPALIER	CODE	BOTANICAL / COMMON NAME	CONT	SPACING	ZONE*	QTY	DETAIL
	LH	LONICERA HISPIDULA / HONEYSUCKLE TO BE PLANTED AT EACH FENCE POST AND IN THE MIDDLE OF FENCE POSTS	1 GAL	4' O.C.	L/0.3	85	5/PD-1

SHRUB AREAS	CODE	BOTANICAL / COMMON NAME	CONT	SPACE	ZONE*	QTY	DETAIL
	AC MI	ACHILLEA MILLEFOLIUM / COMMON YARROW	1 GAL	2' O.C.	L/0.3	104	4/PD-1
	BO MA	BOLBOSCHOENUS MARITIMUS / SALTMARSH BULRUSH	1 GAL	3.5' O.C.	M/0.5	120	4/PD-1
	BU DA	BUCHLOE DACTYLOIDES 'UC VERDE' / UC VERDE BUFFALO GRASS	PLUGS	6" O.C.	M/0.4	15,720	4/PD-1
	CA PR	CAREX PRAEGRACILIS / SLENDER SEDGE	1 GAL	2' O.C.	L/0.3	254	4/PD-1
	EX BS	EXISTING BIOSWALE PLANTING / PROTECT IN PLACE	EXIST			2,376 SF	1/PD-1
	HE SA	HELIOTROPIUM CURASSAVICUM / SALT HELIOTROPE	1 GAL	3' O.C.	L/0.3	83	4/PD-1
	JU EF	JUNCUS EFFUSUS / SOFT RUSH	1 GAL	3' O.C.	L/0.3	193	4/PD-1
	JU PA	JUNCUS PATENS / CALIFORNIA GRAY RUSH	1 GAL	2.5' O.C.	L/0.3	46	4/PD-1
	PL SA	PLUCHEA ODORATA / SALTMARSH FLEABANE	1 GAL	3' O.C.	M/0.4	90	4/PD-1
	ST RI	STACHYS AJUGOIDES VAR. RIGIDA / HEDGE NETTLE	1 GAL	3' O.C.	M/0.4	79	4/PD-1

GROUND COVERS	CODE	BOTANICAL / COMMON NAME	CONT	SPACE	ZONE*	QTY	DETAIL
	GV	GRAVEL AT EDGE OF TRAIL SEE PRECISE GRADING PLAN	GRAVEL	NA	NA	9,987 SF	
	MU	MULCH / AVAILABLE THROUGH AGUINAGA FERTILIZER ALL AREAS TO RECEIVE 3" THICK	MULCH	NA	NA	21,586 SF	

REVEGETATION MIX	CODE	BOTANICAL / COMMON NAME	CONT	SPACE	ZONE*	QTY	DETAIL
	M3	HYDROSEED MIX (TEMP. PERMANENT OR NON-IRRIGATED) AREAS WITH A GRADE OF 20% OR A TEMPORARY CONDITION. SEE HYDROSEED MIX ON SAME SHEET.	HYDROSEED	NA		5,731 SF	

HYDROSEED MIX

MIX/SEED (BOTANICAL NAME)	SEED (COMMON)	LBS/ACRE	%PLS
ACHILLEA MILLEFOLIUM	WHITE YARROW	4.0	80.0
ENCELIA CALIFORNICA	CALIFORNIA ENCELIA	8.0	20.0
ESCHSCHOLZIA CALIFORNICA	CALIFORNIA POPPY	4.0	80.0
LESSINGIA FILAGINIFOLIA	CALIFORNIA ASTER	6.0	30.0
LEYMUS TRITICOIDES	CREEPING WILD RYE	8.0	75.0
LOTUS SCOPARIUS	DEERWEED	6.0	60.0
LUPINUS EXCUBITUS	GRAPE SODA LUPINE	6.0	63.0
MIMULUS (DIPLACUS) AURANTIACUS	BUSH MONKEY FLOWER	10.0	2.5
	TOTAL LBS./ACRE	52.0	

FOR TEMPORARY EROSION CONTROL SEE CIVIL SHEET.

REFERENCE NOTES SCHEDULE WETLANDS

SYMBOL	04 PLANTING ELEMENTS DESCRIPTION	QTY	DETAIL
04-01	ROOT BARRIER (TYP.) - DEEP ROOT MODEL UB 24-2 (415) 434-3072	747 LF	3/PD-1

FN:01664L-1012PP
DATE: 5/2/19
XXX
PLOT SCALE: 1=1

Stantec

Stantec Consulting Ltd.
38 Technology Drive
Irvine, Ca.
92618-5312
Tel. 949.923.6000
Fax. 949.923.6121
www.stantec.com

REVISIONS

No.	DATE	SHEET	APPROVAL	DESCRIPTION

AS-BUILT:

REF. X-XXXX

DESIGNED BY: KM & SC
DRAWN BY: KM & SC
DESIGN CHECK BY:
DRAFTING CHECK BY:

REGISTERED LANDSCAPE ARCHITECT
No. 4053
A. Stevens Cook II
EXP. 10-31-21
STATE OF CALIFORNIA

Long Beach Municipal Urban Stormwater Treatment - Wetlands

LANDSCAPE PLANTING SCHEDULE

GRAPHIC SCALE 0 1 2 3

PAGE X.X.X.

FIELD BOOK X.X.X.

JOB NO. 224501187

NO. R-

SHEET 24 OF 26

DRAWING NO. PP-2

LAST SAVED BY: kmcnguyen
PLOT DATE: Oct. 15, 20 SAVED PATH: C:\pwworkdir\d0539316

REFERENCE NOTES SCHEDULE

CODE	01 EXISTING ELEMENTS DESCRIPTION	QTY	DETAIL
01-01	EXISTING BIOSWALE & HISTORICAL RAILROAD TRACKS, PROTECT IN PLACE.		

CODE	02 NEW CONSTRUCTION ELEMENTS DESCRIPTION	QTY	DETAIL
02-01	BOG SEAT, MODEL #Q2-BOG-82B. COLOR: NATURAL. FINISH: CRAFTSMAN ETCH W/GRAFFITI-RESISTANT COATING. CONTAINS 21% OR GREATER RECYCLED MATERIAL. MANUFACTURED BY QCP (866) 703-3434. INSTALL PER MANUFACTURER'S RECOMMENDATIONS.	6	5/CD-1
02-02	ROUND TABLE WITH 4 SEATS, MODEL #QR-42FC. COLOR: QUAIL HILL RED. FINISH: CRAFTSMAN ETCH W/GRAFFITI-RESISTANT COATING. CONTAINS 21% OR GREATER RECYCLED MATERIAL. MANUFACTURED BY QCP (866) 703-3434. INSTALL PER MANUFACTURER'S RECOMMENDATIONS.	1	3/CD-1
02-03	ROUND TABLE WITH 3 SEATS, MODEL #QR-42FC3-ADA. COLOR: QUAIL HILL RED. FINISH: CRAFTSMAN ETCH W/GRAFFITI-RESISTANT COATING. CONTAINS 21% OR GREATER RECYCLED MATERIAL. MANUFACTURED BY QCP (866) 703-3434. INSTALL PER MANUFACTURER'S RECOMMENDATIONS.	1	4/CD-1
02-04	WASTE CONTAINER, MODEL #QS-SQ2432WA-F17. COLOR: QUAIL HILL RED. FINISH: CRAFTSMAN ETCH W/GRAFFITI-RESISTANT COATING. CONTAINS 21% OR GREATER RECYCLED MATERIAL. MANUFACTURED BY QCP (866) 703-3434. INSTALL PER MANUFACTURER'S RECOMMENDATIONS.	3	2/CD-1
02-05	DRINKING FOUNTAIN, MODEL #10155 SM WITH PET FOUNTAIN AND BOTTLE FILLER. COLOR: TEXTURED BURGANDY. MANUFACTURED BY MOST DEPENDABLE FOUNTAINS (800) 552-6331. INSTALL PER MANUFACTURER'S RECOMMENDATIONS.	1	6/CD-1
02-06	DOG WASTE BAG STATION, MODEL #1002-2. MANUFACTURED BY DOGIPOT (800) 364-7681.	2	8/CD-1
02-07	INTERPRETIVE SIGNAGE-WETLANDS		1/CD-1
02-08	INTERPRETIVE SIGNAGE-CITY TO PROVIDE HISTORICAL RAILROAD SIGNAGE GRAPHIC		1/CD-1
02-09	PEDESTRIAN LIGHTING. SEE ELECTRICAL PLAN.	9	
02-10	COMBINATION ELECTRICAL METER/IRRIGATION CONTROLLER ENCLOSURE		

REFERENCE NOTES SCHEDULE CONTINUED

CODE	02 NEW CONSTRUCTION ELEMENTS DESCRIPTION	QTY	DETAIL
02-11	MULTI-USE TRAIL - SEE CIVIL PLANS FOR PAVEMENT AND SHOULDER		
02-12	DEMOUNTABLE BOLLARD POST	4	10/CD-1
02-13	SUMP FOR DRINKING FOUNTAIN-2'X2'X3'DEEP		6/CD-1
02-14	CLEANOUT FOR DRINKING FOUNTAIN		6/CD-1
02-21	BIKE RACK, MODEL #2170-7-E-C. MANUFACTURED BY CYCLOOPS. EMBEDED MOUNT. COLOR: OCEAN TEAL. AVAILABLE THROUGH COLUMBIA CASCADE (800) 547-1940.		7/CD-1
02-22	COMPANION SEATING - 30"X48", SEATING SHALL COMPLY WITH CALIFORNIA BUILDING CODES CLEAR FLOOR SPACE 11B-305 AND KNEE AND TOE ACCESSIBLE CLEARANCES SECTION 11B-306.	7	

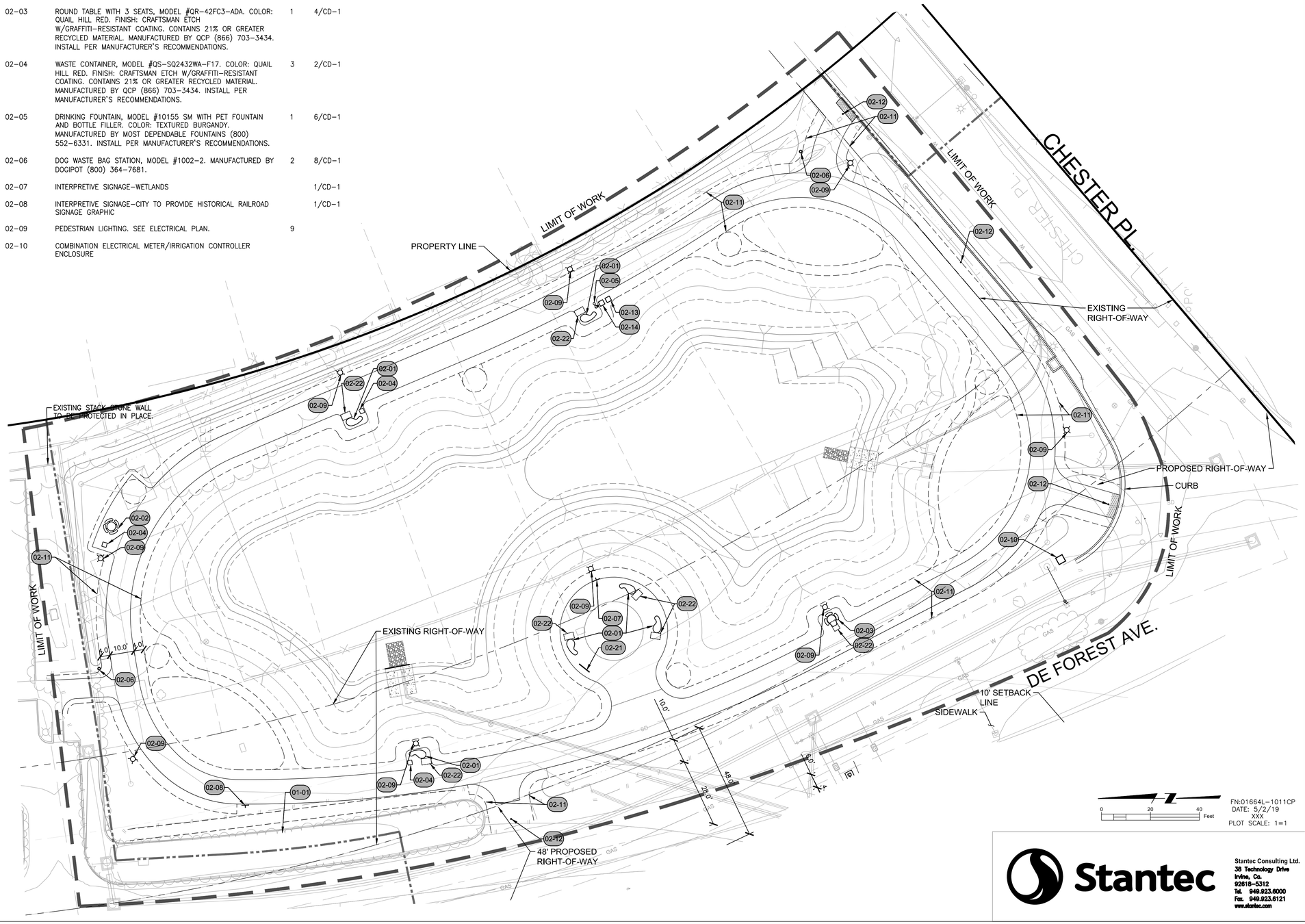

0 20 40 Feet

FN:01664L-1011CP
DATE: 5/2/19
XXX
PLOT SCALE: 1=1

Stantec

Stantec Consulting Ltd.
38 Technology Drive
Irvine, Ca.
92618-5312
Tel. 949.923.6000
Fax. 949.923.6121
www.stantec.com

No.	DATE	SHEET	APPROVAL	DESCRIPTION

REVISIONS

REF. X-XXXX

AS-BUILT:

DESIGNED BY: KM & SC
DRAWN BY: KM & SC
DESIGN CHECK BY:
DRAFTING CHECK BY:

REGISTERED LANDSCAPE ARCHITECT
No. 4053
A. Stevens Cook III
EXP. 10-31-21
STATE OF CALIFORNIA

Long Beach Municipal Urban Stormwater Treatment - Wetlands
LANDSCAPE CONSTRUCTION PLAN

GRAPHIC SCALE 0 1 2 3

PAGE X.X.X.

FIELD BOOK X.X.X.

JOB NO. 224501187

NO. R-

SHEET 25 OF 26

DRAWING NO. CP-1

LAST SAVED BY: scook
PLOT DATE: Oct. 15, 20 SAVED PATH: C:\pwworkdir\d0539316

SINGLE LINE DIAGRAM□SCHEMATIC DIAGRAM SYM□OLOGY AND PLAN SYM□OLOGY

X — THERMAL MAGNETIC CIRCUIT □REA□ER
X □LOCATION
FRAME □AMPS□
□00 / 20
TRIP □AMPS□

X — MCP CIRCUIT □REA□ER
X □LOCATION
CONTINUOUS AMPS
□00 / MCP
INSTANTANEOUS TRIP
MOTOR CIRCUIT PROTECTOR

LOW VOLTAGE DRAWOUT CIRCUIT □REA□ER
□00 / 20
□L□S□I□G□

L	LONG TIME
S	SHORT TIME
I	INSTANTANEOUS
G	GROUND FAULT

X — COM□INATION NEMA RATED STARTER WITH MCP DISCONNECT AND CONTROL POWER TRANSFORMER
40 / MCP
ROMAN NUMERAL □NEMA SI□E
X □LOCATION
□ □STARTER TYPE

□LAN□□	FULL VOLTAGE NON□REVERSING
FVR	FULL VOLTAGE REVERSING
2S2W	TWO SPEED TWO WINDING
2S□W	TWO SPEED ONE WINDING

VFD — VARIA□LE FRE□UENCY DRIVE
X □AMPERE RATING

RVSS — REDUCED VOLTAGE SOLID STATE STARTER
X □AMPERE RATING

X Y — PAC□AGED E□UIPMENT
X □E□UIPMENT SI□E
Y □TYPE □W□□VA□OR HP AS INDICATED□

GENERATOR
RATINGS AS INDICATED

TRANSFER SWITCH □MANUAL OR AUTOMATIC□
RATINGS AS INDICATED

METERING DEVICE
X □METER TYPE

WHM	WATT HOUR METER
WM	WATT METER
AM	AMMETER
VM	VOLTMETER
PFM	POWER FACTOR METER

4□0/□20 — POTENTIAL TRANSFORMER
RATIO AND NUM□ER OF PT□S AS INDICATED

□00/□ — CURRENT TRANSFORMER
RATIO AND NUM□ER OF CT□S AS INDICATED

GROUND FAULT CURRENT TRANSFORMER
RATIO AS INDICATED

□A — FUSE
SI□E AS INDICATED

MOTOR
X □HORSEPOWER
□□FULL LOAD AMPS

DELTA□WYE TRANSFORMER WITH
SECONDARY □VA SI□E AND VOLTAGE
RATIO AS INDICATED

MOV — ELECTRICAL MOTOR OPERATED VALVE□WITH INTEGRAL REVERSING STARTER

□0A — DISCONNECT SWITCH
SI□E AS INDICATED

□0A □0A — FUSED DISCONNECT SWITCH
SI□E AS INDICATED

REV 0□□020□□

SPD — SURGE PROTECTIVE DEVICE

SSM — SOLID STATE METERING DEVICE

SSMP — SOLID STATE MOTOR PROTECTIVE DEVICE

L O R — THREE □POSITION SELECTOR SWITCH

VACUUM OR PRESSURE SWITCH
CLOSE ON RISING PRESSURE

VACUUM OR PRESSURE SWITCH
OPEN ON RISING PRESSURE

FLOAT LEVEL SWITCH
CLOSE ON RISING LEVEL

FLOAT LEVEL SWITCH
OPEN ON RISING LEVEL

NORMALLY OPEN

NORMALLY CLOSED

NORMALLY OPEN HELD CLOSED

NORMALLY CLOSED HELD OPEN

TEMPERATURE SWITCH
CLOSE ON RISING TEMPERATURE

TEMPERATURE SWITCH
OPEN ON RISING TEMPERATURE

FLOW SWITCH
CLOSE ON INCREASING FLOW

FLOW SWITCH
OPEN ON INCREASING FLOW

E□STOP PUSH□UTTON

X — CONTROL RELAY OR COIL
X □DEVICE

CR	CONTROL RELAY
TD	TIME DELAY RELAY
	□TIMING RANGE AS INDICATED□
M	MOTOR STARTER
PC	PHOTOCELL

NORMALLY OPEN CONTACT

NORMALLY CLOSED CONTACT

TIMED CONTACTS
CONTACT ACTION IS DELAYED AFTER COIL IS□

ENERGI□ED

TD□ — NORMALLY OPEN WITH TIME DELAY CLOSING

TD□ — NORMALLY CLOSED WITH TIME DELAY OPENING

DE□ENERGI□ED

TD□ — NORMALLY OPEN WITH INSTANT CLOSING AND TIME DELAY OPENING

TD□ — NORMALLY CLOSED WITH INSTANT OPENING AND TIME DELAY CLOSING

START — NORMALLY OPEN PUSH□UTTON □MOMENTARY□

STOP — NORMALLY CLOSED PUSH□UTTON □MOMENTARY□

OFF ON — NO/NC MAINTAINED PUSH□UTTON

X — PILOT LIGHT
X □LENS COLOR

R	RED
G	GREEN
A	AM□ER
W	WHITE

X — PILOT LIGHT □PUSH□TO□TEST□
X □ LENS COLOR □SEE A□OVE□

HORN

ETM — ELAPSED TIME METER

HEATER

GROUND CONNECTION

CROSSING OF CONDUCTORS □NOT CONNECTED

CROSSING OF CONDUCTORS □CONNECTED

FUSE

VOLTAGE SURGE SUPPRESSOR

RECEPTACLES

X□□ — □20V DUPLEX RECEPTACLE□NEMA CONFIGURATION
□□20R □WALL MOUNT□
X □PANEL□OARD DESIGNATION
□ □CIRCUIT DESIGNATION
□ □TYPE

WP	WEATHERPROOF
XP	EXPLOSION PROOF
GFCI	GROUND FAULT CIRCUIT INTERRUPTER

CONDUIT AND RACEWAY SYM□OLOGY

EXPOSED OR CONCEALED CONDUIT

CONDUIT RUN □UNDERGROUND OR IN CONCRETE□

CONDUIT RUN □CHANGE IN ELEVATION□

CONDUIT TURNING UP

CONDUIT TURNING DOWN

CONDUITS GROUPED TOGETHER □UT
SHOWN AS A SINGLE LINE FOR CLARITY

CONDUIT FROM FLOOR A□OVE TO FLOOR □ELOW

CONDUIT CAPPED□OR SEALED

□UNCTION □OX OR FITTING

MISCELLANEOUS ELECTRICAL SYM□OLOGY

POWER PANEL

DISCONNECT SWITCH

M — MOTOR

T — THERMOSTAT

HORN

COM□INATION STARTER

LIGHTING SYM□OLOGY

X□□ — PENDANT OR CEILING MOUNT LUMINAIRE
X □ LIGHTING PANEL DESIGNATION
□ □ CIRCUIT NUM□ER
□ □ SWITCH DESIGNATION

PENDANT OR CEILING MOUNT LUMINAIRE □UNSWITCHED
□NIGHT LIGHT□

WALL MOUNTED LUMINAIRE

POLE□□RAC□ET□ARM□AND STREETLIGHT

FLUORESCENT LUMINAIRE

FLUORESCENT LUMINAIRE □UNSWITCHED

EMERGENCY LUMINAIRE
□ATTERY OPERATED

EXIT LIGHT□SHOWN WITH TWO ILLUMINATED SIDES□
ARROWS INDICATE DIRECTION OF EXIT

A □ — LUMINAIRE CALLOUT
A □LUMINAIRE TYPE
□ □APPROXIMATE MOUNTING HEIGHT AFF
CLG □CEILING MOUNT
□SEE LUMINAIRE SCHEDULE FOR MORE DETAILS□

$ X□□ □ — LIGHT SWITCH
X □ LIGHTING PANEL DESIGNATION
□ □ CIRCUIT DESIGNATION
□ □ SWITCH DESIGNATION
□ □ SWITCH TYPE

□	□WAY
4	4 WAY
D	DIMMER
M	MANUAL MOTOR STARTER

LIGHTING PANEL

GROUNDING SYM□OLOGY

GROUND ROD AND GROUND WELL

GROUND ROD □/4" X □0□0"□

GROUND CONNECTION □□OLTED TYPE

GROUND CONNECTION □EXOTHERMIC TYPE

□ARE COPPER GROUND TO GROUND WIRE IN SLA□□OR
UNDERGROUND GROUND GRID□SI□E AS NOTED

EARTH GROUNDING

FN:LBM_GE-001
DATE: 8/17/18
PLOT SCALE: 1=1

Stantec

PW LONG BEACH

No.	DATE	SHEET	APPROVAL	DESCRIPTION

REVISIONS

REF. X-XXXX

AS-BUILT:

DESIGNED BY: C REYNOLDS
DRAWN BY: K SHINGANE
DESIGN CHECK BY:
DRAFTING CHECK BY:

REGISTERED PROFESSIONAL ENGINEER
BRUCE M. MAHAFFEY
No. E18415
Exp. 06/30/2022
STATE OF CALIFORNIA

LONG BEACH MUNICIPAL URBAN STORMWATER TREATMENT
(MUST) WETLAND PHASE 1C - 901 DE FOREST AVE

GENERAL ELECTRICAL SYM□OLS □I

GRAPHIC SCALE 0 1 2 3

PAGE X.X.X.

FIELD BOOK X.X.X.

JOB NO. PWXXXX XX

NO. R- XXXX

SHEET X OF XX

DRAWING NO. GE-1

LAST SAVED BY: Sknemkar
PLOT DATE: Oct. 9, 20 SAVED PATH: C:\pwworkdir\d0497249

ELECTRICAL A□□REVIATIONS

A	AMPERE□AUTOMATIC
AC	ALTERNATING CURRENT
AF	CIRCUIT □REA□ER FRAME SI□E
AM	AMMETER
ANN	ANNUNCIATOR
AS	AD□USTA□LE SPEED
AT	AMPERE TRIP
ATS	AUTOMATIC TRANSFER SWITCH
AUTO	AUTOMATIC
AWG	AMERICAN WIRE GAUGE
□ATT	□ATTERY
□C	□ARE COPPER
□□R	□REA□ER
C	CONDUIT□CLOSED
CAP	CAPACITOR
C□	CIRCUIT □REA□ER
C□□	CONTROL □UNCTION □OX
C□T	CIRCUIT
CLF	CURRENT LIMITING FUSE
COM	COMMON
COMM	COMMUNICATIONS
COMP	COMPARTMENT
CP	CONTROL PANEL
CPT	CONTROL POWER TRANSFORMER
CR	CONTROL RELAY□CARD READER□COLD ROLLED
CT	CURRENT TRANSFORMER
DCS	DISTRI□UTED CONTROL SYSTEM
DISC	DISCONNECT
DISTR	DISTRI□UTION
DPDT	DOU□LE POLE DOU□LE THROW
DPST	DOU□LE POLE SINGLE THROW
E	EMERGENCY
EMT	ELECTRICAL METALLIC TU□ING
ENCL	ENCLOSURE
EO	ELECTRICALLY OPERATED
ETM	ELAPSED TIME METER
F	FRE□UENCY□FUSE□FIXED
FDR	FEEDER
FLA	FULL LOAD AMPS
FLUOR	FLUORESCENT
FM	FRE□UENCY METER
FO	FI□ER OPTIC
FVR	FULL VOLTAGE REVERSING
FVNR	FULL VOLTAGE NON□REVERSING
GEN	GENERATOR
GFCI	GROUND FAULT CIRCUIT INTERRUPTER
GND	GROUND
H	HAND
HD	HEAT DETECTOR
HH	HAND HOLE
HID	HIGH INTENSITY DISCHARGE
HOA	HAND□OFF□AUTOMATIC
HPS	HIGH PRESSURE SODIUM
HS	HAND SWITCH
H□	HERT□
I□□	INSTRUMENTATION □UNCTION □OX
IMC	INTERMEDIATE METALLIC CONDUIT
INCAND	INCANDESCENT
IND	INDICATION
INST	INSTANTANEOUS
I/O	INPUT/OUTPUT
I□□	SHORT CIRCUIT CURRENT□AMPS
ISO	ISOLATION
□□□	□UNCTION □OX
□A	□ILO AMPERES
□AIC	□ILO AMP INTERRUPTING CURRENT
□CMIL	□ILO CIRCULAR MILS
□VA	□ILOVOLT AMPERE
L	LOCAL
LCP	LOCAL CONTROL PANEL
LCS	LOCAL CONTROL STATION
LOC	LOCAL
LOR	LOCAL□OFF□REMOTE
LOS	LOC□OUT STOP PUSH□UTTON
LP	LIGHTING PANEL
LRA	LOC□ED ROTOR AMPS
LS	LEVEL SWITCH
LSIG	LONG TIME SHORT TIME INSTANTANEOUS GROUND FAULT
LTG	LIGHTING
LTS	LIGHTS

M	MOTOR CONTACTOR COIL
□A	MILLIAMPERE
MCP	MOTOR CIRCUIT PROTECTOR
MLO	MAIN LUGS ONLY
MOV	MOTOR OPERATED VALVE
MS	MANUAL MOTOR STARTER
MTS	MANUAL TRANSFER SWITCH
NEUT	NEUTRAL
NC	NORMALLY CLOSED
NP	NAMEPLATE
NO	NORMALLY OPENED
O	OPEN□OFF
OL	OVERLOAD
PA	PU□LIC ADDRESS
P□	PUSH□UTTON□PULL□OX
PC	PHOTOCELL
PCM	PROCESS CONTROL MODULE
PF	POWER FACTOR
PFM	POWER FACTOR METER
PH	PHASE
PL	PILOT LIGHT
PNL□D	PANEL□OARD
PP	POWER PANEL□OARD
POS	POSITION
POT	POTENTIOMETER
PRI	PRIMARY
PT	POTENTIAL TRANSFORMER
PT□	PAN□TILT□□OOM
PWR	POWER
R	REMOTE
RECPT	RECEPTACLE
RGS	RIGID GALVANI□ED STEEL
RMS	ROOT MEAN S□UARE
RTU	REMOTE TERMINAL UNIT
RVSS	REDUCED VOLTAGE SOLID STATE
SEL SW	SELECTOR SWITCH
SE□	SE□UENCE
SHLD	SHIELDED
SIG	SIGNAL
SP	SPARE
SP HTR	SPACE HEATER
SPDT	SINGLE POLE DOU□LE THROW
SPST	SINGLE POLE SINGLE THROW
SSM	SOLID STATE METER
SSMP	SOLID STATE MOTOR PROTECTOR
SSS	SOLID STATE STARTER
ST□SH	SHUNT TRIP
STR	STARTER
SSTU	SOLID STATE TRIP UNIT
SW	SWITCH
SW□D	SWITCH□OARD
SWGR	SWITCHGEAR
TACH	TACHOMETER
T□	TERMINAL □OX
TERM	TERMINAL
TM	REPEAT CYCLE TIMER
TD	TIME DELAY RELAY
TS	TEMPERATURE SWITCH
TX	TRANSFORMER
UPS	UNINTERRUPTI□LE POWER SUPPLY
V	VOLTAGE□VOLTS
VA	VOLT AMPERE
VAR	VOLT AMPERE REACTIVE
VFD	VARIA□LE FRE□UENCY DRIVE
VM	VOLTMETER
VP	VAPOR PROOF
W	WATTS□WIRE
WM	WATT METER
WP	WEATHERPROOF
XFMR	TRANSFORMER
XMTR	TRANSMITTER
XP	EXPLOSION PROOF

REV □0□□2

GENERAL ELECTRICAL NOTES

□□ ALL RACEWAYS AND E□UIPMENT SHALL □E INSTALLED AND GROUNDED IN ACCORDANCE WITH THE 20□4 EDITION OF THE NATIONAL ELECTRICAL CODE AND APPLICA□LE LOCAL CODES□

2□ THE CONTRACTOR SHALL VERIFY THE EXACT LOCATION OF TERMINAL □OXES AND CONDUIT ENTRANCES OF ALL E□UIPMENT AGAINST APPROVED SHOP DRAWINGS □EFORE STU□□ING UP CONDUITS□

□□ REFER TO SPECIFICATION SECTION 2□0□□□ FOR RE□UIREMENTS RELATED TO FLEXI□LE CONDUIT INSTALLATION

4□ CONDUIT RUNS ARE SHOWN DIAGRAMMATICALLY ONLY AND SHALL □E INSTALLED IN A MANNER TO PREVENT □ONFLICTS WITH E□UIPMENT OR STRUCTURAL CONDITIONS□EXPOSED CONDUIT SHALL □E INSTALLED PARALLEL OR PERPENDICULAR TO □EAMS AND WALLS□REFER TO SPECIFICATION SECTION 2□0□□□□

□□ CONDUIT STU□□UPS SHALL NOT □E MORE THAN □ INCHES FROM THE CENTERLINE OF TERMINAL □OXES□

□□ IN THE EVENT OF INTERFERENCE □ETWEEN ELECTRICAL E□UIPMENT SHOWN ON THE DRAWINGS AND OTHER E□UIPMENT□THE CONTRACTOR SHALL NOTIFY THE ENGINEER IN WRITING AND THE ENGINEER SHALL APPROVE PROPOSED CHANGES □EFORE THEY ARE MADE□

□□ ALL SURFACE MOUNTED PANELS AND PANEL□OARDS ON THE INTERIOR OF EXTERIOR WALLS A□OVE GRADE OR IN OTHER LOCATIONS CONSIDERED DAMP OR WET SHALL □E MOUNTED SO AS TO MAINTAIN A □4 INCH □MINIMUM□AIR SPACE □ETWEEN THE ENCLOSURE AND THE WALL□

□□ LOCATION OF PULL□OXES ARE APPROXIMATE□ THE CONTRACTOR SHALL COORDINATE EXACT LOCATION WITH MECHANICAL PIPING AND SHALL □E □ INCHES □MINIMUM□AWAY FROM MECHANICAL PIPING FLOW LINES□

□□ ONLY MA□OR PULL□OXES ARE SHOWN□THE CONTRACTOR SHALL PROVIDE ADDITIONAL PULL□OXES WHERE RE□UIRED TO MA□E A WOR□A□LE INSTALLATION□

□0□ THE WOR□ SHALL □E PERFORMED IN ACCORDANCE WITH THE DETAILS WHETHER OR NOT THEY ARE REFERENCED ON THE DRAWINGS□

□□□ ALL CONDUIT RUNS CROSSING EXPANSION □OINTS SHALL HAVE EXPANSION OR EXPANSION AND DEFLECTION TYPE FITTINGS□FOR LOCATIONS OF EXPANSION □OINTS□REFER TO THE STRUCTURAL DWGS□

□2□ LUMINAIRES SHALL □E MOUNTED ACCORDING TO THE MOUNTING HEIGHT GIVEN ON THE DRAWINGS□WITH THE DISTANCE □EING MEASURED FROM THE □OTTOM OF THE LUMINAIRE TO THE FINISHED FLOOR□THE APPROPRIATE MOUNTING □RAC□ETS AND HARDWARE SHALL □E SUPPLIED□

□□□ ALL PANEL□OARDS SHALL □E MOUNTED SO THAT THE DISTANCE FROM THE CENTERLINE OF THE TOP CIRCUIT □REA□ER OPERATING HANDLE IN THE UPPERMOST POSITION TO THE FINISHED FLOOR SHALL NOT EXCEED □□□"□

□4□ THE WIRING DIAGRAMS□□UANTITY AND SI□E OF WIRES AND CONDUIT REPRESENT A SUGGESTED ARRANGEMENT □ASED UPON SELECTED STANDARD COMPONENTS OF ELECTRICAL E□UIPMENT□MODIFICATIONS ACCEPTA□LE TO THE ENGINEER MAY □E MADE □Y THE CONTRACTOR TO ACCOMMODATE E□UIPMENT ACTUALLY PURCHASED□THE □ASIC SE□UENCE AND METHOD OF CONTROL MUST □E MAINTAINED AS INDICATED ON THE DRAWINGS AND/OR SPECIFICATIONS□

□□□ CONNECTIONS □ETWEEN RIGID CONDUIT AND MOTOR TERMINAL □OXES OR SIMILAR E□UIPMENT SU□□ECT TO VI□RATION SHALL □E FLEXI□LE LI□UID□TIGHT CONDUIT□

□□□ CONDUITS SHALL □E TERMINATED SO AS TO PERMIT NEAT CONNECTION TO MOTORS AND OTHER E□UIPMENT□

□□□ CONDUITS FOR FUTURE E□UIPMENT OR EXTENSIONS SHALL □E TERMINATED AS SHOWN IN DETAIL OR AS SPECIFIED□

□□□ MCC AND SWITCHGEAR COMPARTMENT DESIGNATIONS SHALL □E AS FOLLOWS□

□LAN□/SPACE□ CONTAINS NECESSARY □US AND HARDWARE FOR FUTURE ADDITION OF □REA□ERS OR STARTERS□

SPARE□ CONTAINS A COMPLETE INSTALLED □REA□ER OR STARTER AVAILA□LE FOR FUTURE USE□

□□□ ALL MOTOR STARTER CONTROL POWER TRANSFORMERS SHALL □E SI□ED TO PROVIDE SUFFICIENT VOLT□AMPERE CAPACITY FOR OPERATING ALL LOCAL AND REMOTE ELECTRICAL DEVICES ASSOCIATED WITH CONTROL OF THE MOTOR IN ADDITION TO THE STARTER COIL□

20□ MOTOR CONTROL CENTERS AND ALL FREE STANDING PANELS SHALL □E SET ON CONCRETE HOUSE□EEPING PADS WITH LEVELING CHANNELS EM□EDDED IN THE PAD□

2□□ ALL RECEPTACLES IN OUTDOOR AND ANTICIPATED WET AREAS SHALL □E GROUND FAULT CIRCUIT INTERRUPTER RECEPTACLES WITH WEATHERPROOF COVERS□

22□ ELECTRICAL CONTRACTOR SHALL VISIT THE SITE PRIOR TO □IDDING THE PRO□ECT TO VERIFY THE SCOPE OF WOR□ WITH FIELD CONDITIONS□PARTICULAR ATTENTION SHOULD □E GIVEN TO NEW CONDUIT RUNS IN EXISTING □UILDINGS□

2□□ E□UIPMENT LOC□OUTS SHALL □E IN STRICT ACCORDANCE WITH OWNER'S RE□UIREMENTS□

24□ FOR LIGHTING AND RECEPTACLE SYSTEMS□ONLY CIRCUIT NUM□ERS ARE SHOWN□CONTRACTOR SHALL PROVIDE ALL NECESSARY CONDUITS□WIRES□ FITTINGS□□UNCTION □OXES AND ALL NECESSARY COMPONENTS SHOWN OR NOT SHOWN ON THE DRAWINGS□TO MA□E THE ELECTRICAL INSTALLATION COMPLETE AND OPERATIONAL□ALL CONDUIT RUNS SHALL □E CONCEALED UNLESS INDICATED OTHERWISE□CIRCUIT LOADING SHALL □E AS INDICATED IN THE PANEL SCHEDULES□ALL LIGHTING AND RECEPTACLE CIRCUITS SHALL INCLUDE GROUND WIRE□

REV 0□□020□□

ELECTRICAL DEMOLITION NOTES

□□ □IDDING CONTRACTORS SHALL VISIT THE SITE TO ASSESS THE SCOPE OF DEMOLITION□REMOVAL AND MODIFICATION WOR□□

2□ ELECTRICAL CONTRACTOR AND THE OWNER SHALL DE□ENERGI□E ALL WIRING PRIOR TO REMOVAL OF E□UIPMENT□DEVICES□MOTORS INSTRUMENTATION□CONTROL PANELS□ETC□CONTRACTOR SHALL O□TAIN PRIOR APPROVAL FROM THE OWNER□

□□ EXPOSED RACEWAYS□REMOVE CONDUIT□WIRES□AND □OXES□PATCH TO MATCH EXISTING□FINISH□ALL OPENINGS IN WALLS AND FLOORS

4□ CONCEALED CONDUITS IN THE SLA□□REMOVE EXISTING WIRES TO THE EXTENT POSSI□LE AND A□ANDON CONDUITS IN THE SLA□□CUT CONDUIT FLUSH AND PATCH THE FLOOR TO MATCH EXISTING

□□ CONTROL PANEL□ELECTRICAL CONTRACTOR SHALL DE□ENERGI□E AND REMOVE ALL CONDUIT AND WIRE AS DESCRI□ED IN NOTE 2□ CONTRACTOR SHALL REMOVE PANELS AS NOTED ON THE CONTRACT DRAWINGS□REFER TO NOTE 4 A□OVE FOR DISPOSITION OF ENCASED CONDUITS□

□□ MOTOR CONTROL CENTERS□DISCONNECT AND REMOVE ALL CONDUITS AND WIRING TO EXISTING STARTERS AND/OR □REA□ERS□PANEL□OARDS□ □RANCH CIRCUITS□INTERLOC□S AND STATUS WIRING WITHIN MCC□ REFER TO SECTION 2□0000 FOR ADDITIONAL ELECTRICAL DEMOLITION AND REMOVAL RE□UIREMENTS□

FN:WL_GE-002
DATE: 8/17/18

PLOT SCALE: 1=1

Stantec

PW LONG BEACH

No.	DATE	SHEET	APPROVAL	DESCRIPTION

REVISIONS

AS-BUILT:

REF. X-XXXX

DESIGNED BY: C REYNOLDS
DRAWN BY: K SHINGANE
DESIGN CHECK BY:
DRAFTING CHECK BY:

REGISTERED PROFESSIONAL ENGINEER
BRUCE M. WONG
No. E18415
Exp. 06/30/2002
ELECTRICAL
STATE OF CALIFORNIA

LONG BEACH MUNICIPAL URBAN STORMWATER TREATMENT (MUST) WETLAND PHASE 1C - 901 DE FOREST AVE

GENERAL ELECTRICAL NOTES AND A□□REVIATIONS

GRAPHIC SCALE 0 1 2 3

PAGE X.X.X.

FIELD BOOK X.X.X.

JOB NO. PWXXXX XX

NO. R- XXXX

SHEET X OF XX

DRAWING NO. GE-2

LAST SAVED BY: bmwong
PLOT DATE: Oct. 9, 20 SAVED PATH: C:\pwworkdir\d0497249

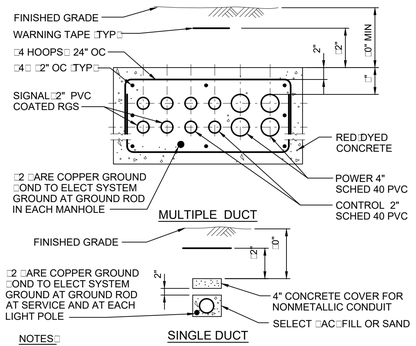

NOTES□

□□ AT INTERSECTIONS WITH STRUCTURES HOO□ □4S INTO THE FOOTING OR WALL □TYP□

2□ SEE DUCT □AN□ SECTIONS AND DETAILS FOR NUM□ER AND ARRANGEMENT OF DUCTS□

TYPICAL DUCT□AN□

REV □□0□□2 — E□□0□

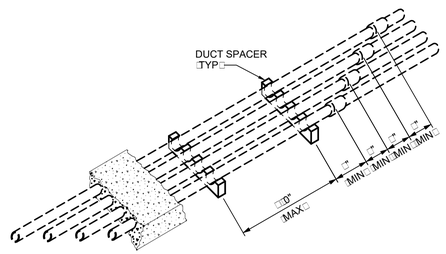

TYPICAL DUCT□AN□

□OINT/SUPPORT SPACING — REV □□0□□2 — E□□0□

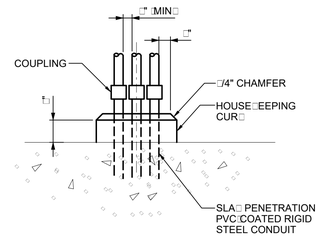

NOTE□

HOUSE□EEPING CUR□ RE□UIRED AT ALL LOCATIONS FOR SINGLE AND MULTIPLE RISERS□

CONCRETE HOUSE□EEPING CUR□

NON□HA□ARDOUS LOCATIONS — REV □□0□□2 — E□20□

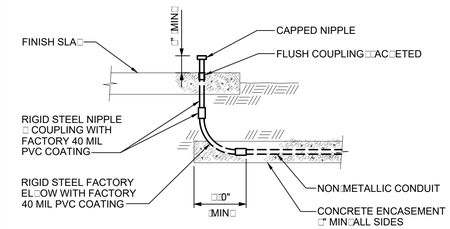

RISER FROM NON□METALLIC DUCT

REV □□0□□2 — E□20□

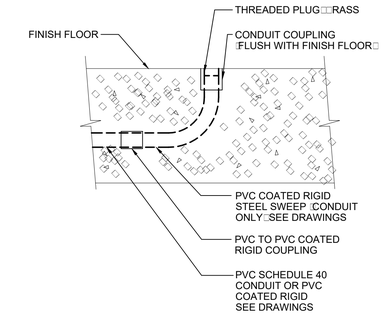

CONDUIT TERMINATION FOR FUTURE E□UIPMENT

REV □□0□□2 — E□20□

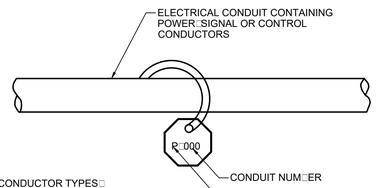

CONDUCTOR TYPES□
P □POWER
C □CONTROL OR DIGITAL STATUS
S □SIGNAL □ANALOG□

CONDUIT NUM□ERS ARE LISTED ON THE CONDUIT / CA□LE SCHEDULE

NOTE□

□□CONDUIT TAGS SHALL □E AFFIXED TO CONDUITS□

A□AFTER ALL WOR□ING DRAWINGS ARE APPROVED AND ALL FIELD MODIFICATIONS HAVE □EEN MADE□

□□□EFORE FINAL ACCEPTANCE TESTING HAS STARED□

CONDUIT IDENTIFICATION TAG

REV □□0□□2 — E□2□0

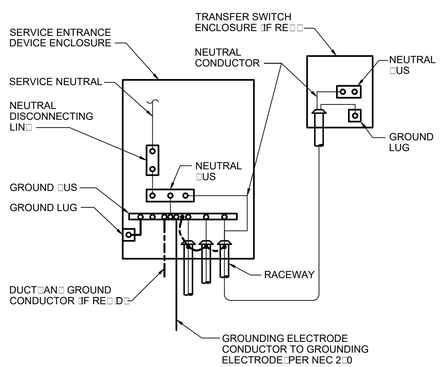

SERVICE GROUNDING

NON□SEPARATELY DERIVED SOURCE — REV □□0□□2 — E□□00

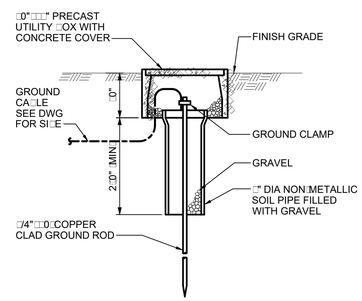

GROUND ROD AND WELL

REV □□0□□2 — E□□0□

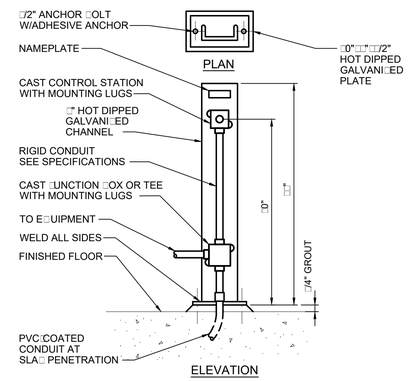

PEDESTAL MOUNTED CONTROL STATION

REV □00□□4 — E□40□

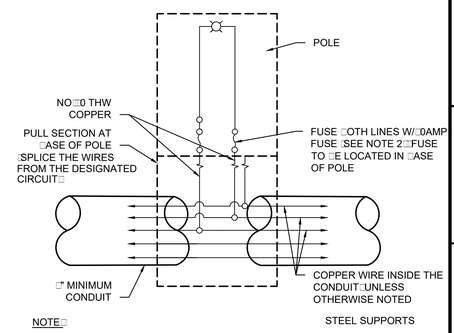

NOTE□

□□ DESIGN SHALL CONFORM TO THESE RE□UIREMENTS EXCEPT AS APPROVED □Y THE CITY ENGINEER□

2□ □00V □0A IN□LINE WATERPROOF FUSE HOLDER SHALL □E USED□

STREET LIGHT WIRING DIAGRAM

E□□0□

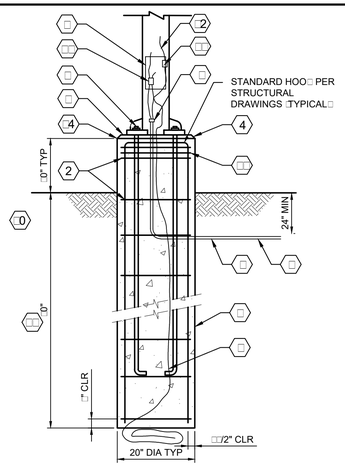

NOTES□

□□ POURED IN PLACE ROUND CONCRETE SUPPORT □ASE□

2□ 4□NO □VERTICAL □ARS WITH NO □TIES □ □INCH O□C□SEE NOTE □□□

□□ ACCESS HAND□HOLE□

4□ 3/4-INCH - 45°CHAMFER ALL AROUND.

□□ GROUT IN ALL AROUND □ETWEEN □OTTOM OF POLE □ASE FOLLOWING POLE ERECTION AND FINAL LEVELING□

□□ STU□ CONDUIT UP INTO POLE □ASE WIRING CAVITY□IF RGS TERMINATE WITH GROUNDING □USHING□□

□□ PROVIDE SUPPORT AND LEVELING NUTS ON TOP AND □OTTOM OF POLE □ASE MOUNTING PLATE□MOUNTING PLATE AND MOUNTING □OLTS SHALL □E PER MANUFACTURERS □OLT PATTERN□LENGTH SHALL □E PER MANUFACTURERS SPECIFICATIONS□WITH 2□0" MIN EM□EDMENT INTO CONCRETE POLE □ASE□

□□ TYPICAL PVC CONDUIT□S□□ WITH CONDUCTORS AS INDICATED ON DRAWINGS□

□□ □□□4 AWG □ARE COPPER GROUND□ COIL □0□INCH AT □OTTOM OF FOUNDATION□

□0□ TOP OF SODDED GRADE□SIDEWAL□ OR ASHPALT PAVING AS INDICATED ON THE RESPECTIVE AREA SITE PLAN□

□□□ □OLTED TYPE WIRE GROUND CONNECTOR□

□2□ WIRING TO LIGHT FIXTURE□ CONNECT COMPLETE□

□□□ WATERPROOF IN□LINE FUSES□

□4□ TOP OF POLE □ASE SHOWN AT □0□INCHES□AD□UST HEIGHT OF CONCRETE □ASE TO MATCH EXISTING□MAINTAIN MINIMUM EM□EDMENT DEPTH□

□□□ LATERAL REINFORCEMENT SHALL □E DISTRI□UTED WITHIN □INCHES OF THE TOP OF THE COLUMN AND SHALL CONSIST OF 2□NO 4 OR □NO □ □ARS□PER ACI□□□ □□□0□□□□

□□□ WHERE LOCATED AD□ACENT TO □IO□SWALE□PROVIDE ADDITIONAL □2" OF POLE □ASE DEPTH TO ENSURE □0" EM□EDMENT IN SOIL UNDISTUR□ED □Y □IO□SWALE INSTALLATION AS NOTED ON SITE PLAN□

POLE FOUNDATION

E□□02

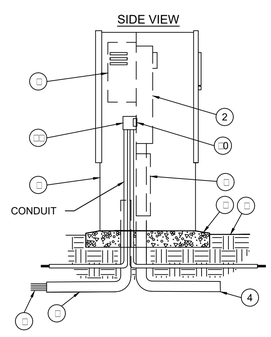

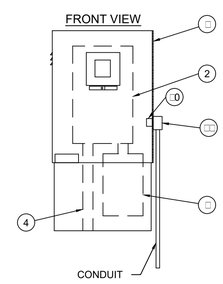

LEGEND□

□□ METERED CONTROLLER ENCLOSURE

2□ METER SOC□ET WITH TEST □LOC□S

□□ LOAD CENTER

4□ CONDUIT □NOT SUPPLIED□FOR LINE FEED INTO METER□

□□ POURED CONCRETE □ASE □□2" MIN□ THIC□NESS □EXTEND"□EYOND OUTSIDE DIMENSIONS OF ENCLOSURE WITH □2□ SLOPE FOR DRAINAGE□□ASE SHALL HAVE THE □□RE□ARS ON □2" CENTERS EACH WAY□EXTEND THE SLA□ □" □EYOND THE ENCLOSURE OUTSIDE EDGE□

□□ FINISH GRADE□

□□ DIRECT □URIAL CONTROL WIRES TO CONTROL VALVES□

□□ PVC LONG SWEEP ELL □USE ONE SWEEP ELL PER CONTROLLER□

□□ AUTOMATIC CONTROLLER□

□0□ ASTRONOMICAL TIMER FOR POLE LIGHT CONTROL □"H □□"W □□" DEEP□

□□□ SPLICE □UNCTION □OX □"H □□"W □□" DEEP□ SEE DETAILS FOR E□□04 FOR CONNECTION□

□2□ □2 □ARE COPPER GROUND RING ELECTRODE AROUND THE SERVICE E□UIPMENT□

METERED CONTROLLER ENCLOSURE

E□□0□

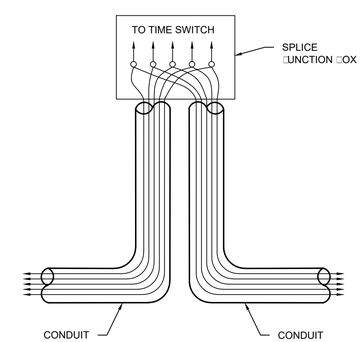

SPLICE □UNCTION □OX CONNECTION DETAILS

E□□04

FN:WL_GE-003
DATE: 8/17/18

PLOT SCALE: 1=1

Stantec

No.	DATE	REVISIONS	SHEET	APPROVAL	DESCRIPTION

REF. X-XXXX

AS-BUILT:

DESIGNED BY: C REYNOLDS
DRAWN BY: K SHINGANE
DESIGN CHECK BY:
DRAFTING CHECK BY:

REGISTERED PROFESSIONAL ENGINEER — Brian K. Mello — No. E18415 — Exp. 06/30/2021 — STATE OF CALIFORNIA

LONG BEACH MUNICIPAL URBAN STORMWATER TREATMENT (MUST) WETLAND PHASE 1C - 901 DE FOREST AVE

GENERAL ELECTRICAL STANDARD DETAILS □I

GRAPHIC SCALE 0 1 2 3

PAGE X.X.X.

FIELD BOOK X.X.X.

JOB NO. PWXXXX XX

NO. R- XXXX

SHEET X OF XX

DRAWING NO. GE-3

LAST SAVED BY: Schenkar
PLOT DATE: Oct. 9, 20 SAVED PATH: C:\pwworkdir\d0497249

SHEET □EYNOTES

A□ SPLICE THE WIRES FROM THE DESIGNATED CIRCUIT INSIDE THE PULL SECTION AT THE □ASE OF POLE □

LUMINAIRE SCHEDULE

FIXTURE TYPE	LAMP	LAMP WATTAGE	VOLTAGE	MANUFACTURER(S) OR E□UAL	MODEL NUMBER(S)	DESCRIPTION
P□	LED	□0	240	G□L	LUMINAIRE □CMO□□T4N□□FGC□MHS□□0W□□□240□NONE□NONE□DG□TX POLE□PA40□□2□DG□TX □ASE COVER □□D□□DG□TX	LED LUMINAIRE WITH CLEAR TEMPERED GLASS LENS□TYPE III MEDIUM DISTRI□UTION□WITH HOUSE SIDE SHIELDS□□000□□WITH 0□□0 V DIMMING□DRIVER MOUNTED ON A □UIC□ TO RELEASE TRAY□IP□□ WEATHERPROOF LUMINIARE WITH "V" GROOVE SILICON GAS□ET□ WITH □2□POLE AND CAST □ASE COVER□

LOAD CENTER PANEL SCHEDULE

□20/240V VOLTS
□00 A MAIN □REA□ER

□ PH
2 W
□00 A

PANEL□OARD□ LC
LOCATION□ METERED CONTROLLER ENCLOSURE

FEED□SCE POLE
MOUNTING□□□□□□□□□□

LOAD DESCRIPTION	□VA PH A	□VA PH □	LTG	REC	MIS	CIR	□R □			□R □	CIR	MIS	REC	LTG	□VA PH A	□VA PH □	LOAD DESCRIPTION
POLE LIGHTS	0□□□		X	□	□	□	20			20	2	□	□	X	0□□□		POLE LIGHTS
		0□□□				□	2P			2P	4					0□□□	
ASTRONOMICAL TIMER	0□0□		□	□	X	□	20			20	□	X	□	□	0□4□		IRRIGATION CONTROLLER
		0□0□				□	2P			20	□	□	□	□		0□□□	GFCI RECEPTACLES
SPARE	□□□□□		□	□	□	□	20			20	□0	□	□	□	□□□□□		SPARE
SPARE		□□□□□	□	□	□	□□	20			20	□2	□	□	□		□□□□□	SPARE
SPARE	□□□□□		□	□	□	□□	20			20	□4	□	□	□	□□□□□		SPARE
SPARE		□□□□□	□	□	□	□□	20			20	□□	□	□	□		□□□□□	SPARE
	0□24	0□24				TOTAL				TOTAL					0□□□	0□□□	
	PHASE LOAD									TOTAL LOAD							
	0□□□	0□□□								□44 □VA							

CONDUIT RISER DIAGRAM

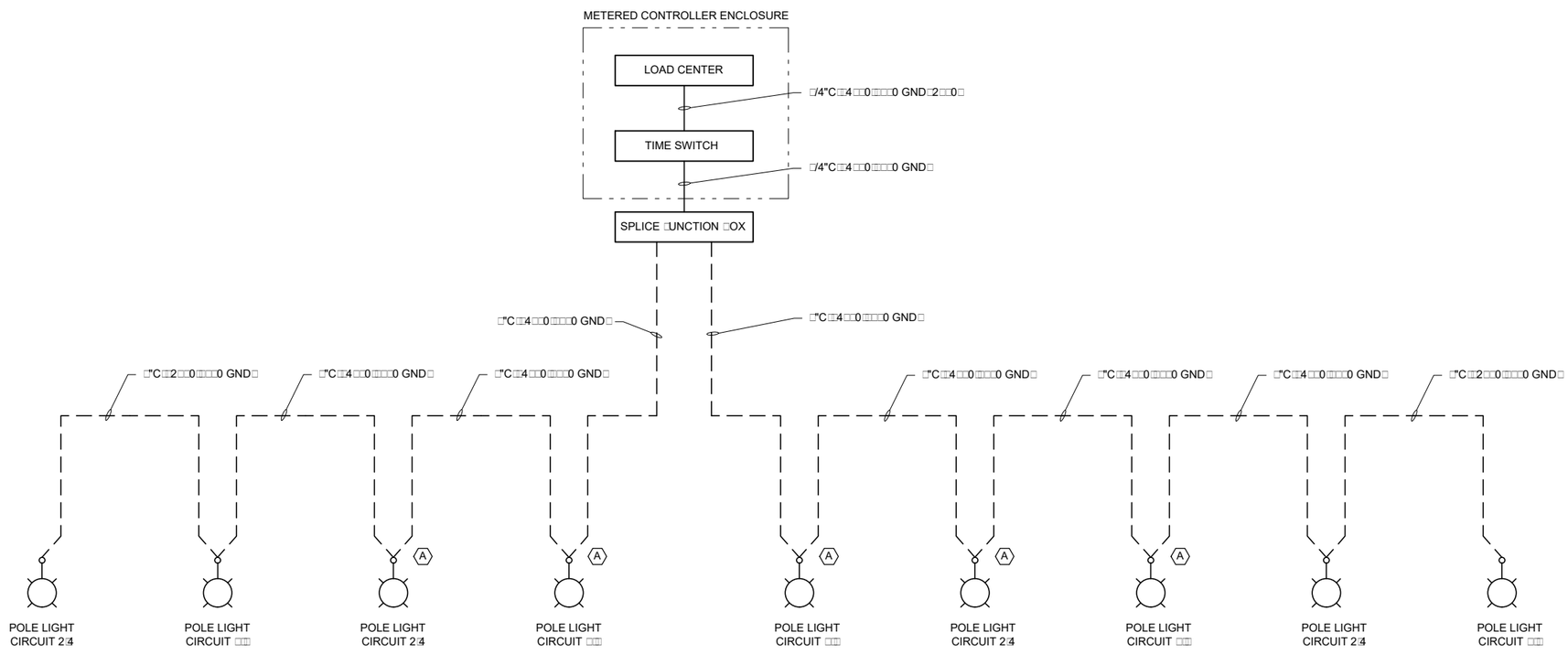

FN:WL_GE-004
DATE: 8/17/18
PLOT SCALE: 1=1

Stantec

REVISIONS

No.	DATE	SHEET	APPROVAL	DESCRIPTION

REF. X-XXXX

AS-BUILT:

DESIGNED BY: C REYNOLDS
DRAWN BY: K SHINGANE
DESIGN CHECK BY:
DRAFTING CHECK BY:

REGISTERED PROFESSIONAL ENGINEER
No. E18415
Exp. 06/30/2021
CIVIL ENGINEERING
STATE OF CALIFORNIA

LONG BEACH MUNICIPAL URBAN STORMWATER TREATMENT (MUST) WETLAND PHASE 1C - 901 DE FOREST AVE
ELECTRICAL
LUMINIARE AND PANEL PANEL SCHEDULES

GRAPHIC SCALE 0 1 2 3

PAGE X.X.X.
FIELD BOOK X.X.X.

JOB NO. PWXXXX XX
NO. R- XXXX
SHEET X OF XX
DRAWING NO. GE-4

LAST SAVED BY: SKhenkar
PLOT DATE: Oct. 9, 20 SAVED PATH: C:\pwworkdir\d0497249